YAMAHA

PARTS CATALOGUE

YFM70RSPX (1S3S) U.S.A.
YFM70RSPX (1S3T) CANADA
YFM70RSPX (1S3U) EUROPE
YFM70RSPX (1S3S) OCEANIA

1G1S3-100EK

( )

YAMAHA GENUINE Parts & Accessories

2009/8/24

NEWS NO.	DATE	COMMENT
PE0-MC-080035	Jul.,30,2008	FIG.25:FRONT SUSPENSION & WHEEL ILLUSTRATION CORRECTION
PE0-MC-090052	Jul.,30,2009	FIG.16: TRANSMISSION LIST CORRECTION
PE0-MC-090060	Aug.,3,2009	FIG.33 FRONT MASTER CYLINDER LIST CORRECTION

YFM70RSPX
PARTS CATALOGUE
©2007 by Yamaha Motor Co., Ltd.
1st edition, December 2007
All rights reserved.
Any reprinting or unauthorized use
without the written permission of
Yamaha Motor Co., Ltd.
is expressly prohibited.
Printed in Japan.

FOREWORD

This Parts Catalogue is related to the parts for the model(s) on the cover page. When you are ordering replacement parts, please refer to this Parts Catalogue and quote both part numbers and part names correctly.

1. Modifications or additions which have been made after the issue of the Parts Catalogue will be announced in the Parts News.
   It is advisable that you make the necessary corrections to the Parts Catalogue according to the Parts News.

2. Abbreviations
   The following abbreviations are used in this Parts Catalogue.

   “UR” Use specified parts number.
   “UN” Use as many as needed.
   “AP” Alternate Parts
   “LM” Locally Made (Parts need to be ordered locally)
   “F#” Frame No. (Applicable machine No.)
   “O/S” Over Size

3. The number of components for assembly
   - Parts, which are to be supplied in an assembly, are listed with a dot (.) in front of the part name as shown below.
   - The numeral appearing to the right of each component part indicates the quantity of parts for each assembly unit.

PART NO.	DESCRIPTION	Q’TY	REMARKS
2F5–83310–60	FRONT FLASHER LIGHT ASSY	2	
115–83311–60	.BULB (6V–18W)	1	

4. Applicable colours of graphics are represented in the “REMARKS” as shown below.

PART NO.	DESCRIPTION	Q’TY	REMARKS
2N4–24110–00–X5	FUEL TANK COMP.	2	MXR
3J1–24240–10	.GRAPHIC, FUEL TANK	1	FOR MXR

5. Note that the illustrations for reference in finding parts numbers are not to be used for assembling. When assembling, please use the applicable service manual.

6. The asterisk (*) before a reference number indicates modified items after the first edition.

7. Applicable Serial No.

Engine Serial No.

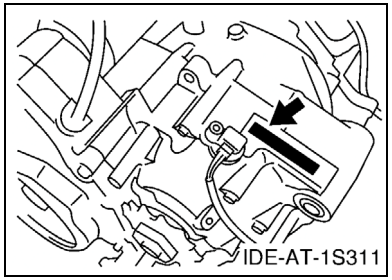

Frame Serial No.

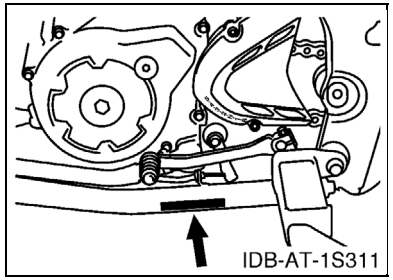

8. Applicable Colour Code (The (*) mark shows Model colour.)

Abbreviation	Colour Name	Colour Code
SMJ(*)	BLACK METALLIC J	0906

9. Quantity Column Information

Column No.	Name Of Q’ty Column	Destination
1	USA	U.S.A.
2	CAN	CANADA
3	EUR	EUROPE
4	OCE	OCEANIA

MODEL LABEL

(1) A label called “Model Label” is affixed in the location as indicated in (3) below.
When using this parts catalogue, please be sure to cross–reference the “model code – production code No.” in the catalogue with the “model code – production code No.” indicated on the Model Label affixed onto the product concerned.

(2) “Model Label” Indication

a b ○ xxxx – xxx ● x c	a: Model Type Code b: Production Code No. c: Colouring Type

○ 4TW1–010 ● A

(3) Model Label Affixing Location

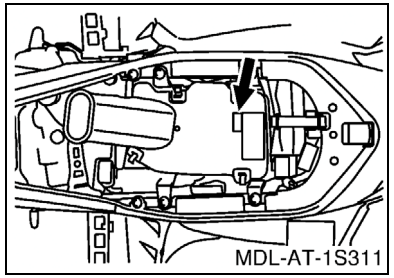

(4) Colouring Information

Model Code	Colouring Type Code	Colour Code	Colour Name	Abbreviation
1S3S	A	0906	BLACK METALLIC J	SMJ
1S3T	A	0906	BLACK METALLIC J	SMJ
1S3U	A	0906	BLACK METALLIC J	SMJ

(5) Model Code – Production Code Number of Model Listed in This Parts Catalogue

Model Code	Production Code No.	Country (destination)
1S3S	010	U.S.A.
	020	AUSTRALIA
		NEW ZEALAND
1S3T	010	CANADA
1S3U	010	EUROPE

Model Code	Production Code No.	Country (destination)

CONTENTS

ENGINE

CYLINDER HEAD 1
CYLINDER 2
CRANKSHAFT & PISTON 3
VALVE 4
CAMSHAFT & CHAIN 5
WATER PUMP 6
RADIATOR & HOSE 7
OIL PUMP 8
INTAKE 10
THROTTLE BODY ASSY 1 12
EXHAUST 13
CRANKCASE 14
CRANKCASE COVER 1 15
STARTER 16
CLUTCH 17
TRANSMISSION 19
SHIFT CAM & FORK 21

CHASSIS

FRAME 23
FRONT FENDER 25
REAR FENDER 26
OIL TANK 28
REAR ARM 29
REAR SUSPENSION 32
STEERING 33
FRONT SUSPENSION & WHEEL 34
FUEL TANK 36
SEAT 38
FRONT WHEEL 39
FRONT BRAKE CALIPER 40
REAR WHEEL 42
REAR BRAKE CALIPER 43
STEERING HANDLE & CABLE 45
FRONT MASTER CYLINDER 47
STAND & FOOTREST 48
REAR MASTER CYLINDER 49
GUARD 51
GENERATOR 52
STARTING MOTOR 53
HEADLIGHT 54
TAILLIGHT 55
TAILLIGHT 2 56
HANDLE SWITCH & LEVER 57
ELECTRICAL 1 58
ELECTRICAL 2 61
EMBLEM & LABEL 1 62
EMBLEM & LABEL 2 63
EMBLEM & LABEL 3 64
EMBLEM & LABEL 4 65

ALTERNATE PARTS

ALTERNATE FOR METER 66

INDEX

NUMERICAL INDEX 67

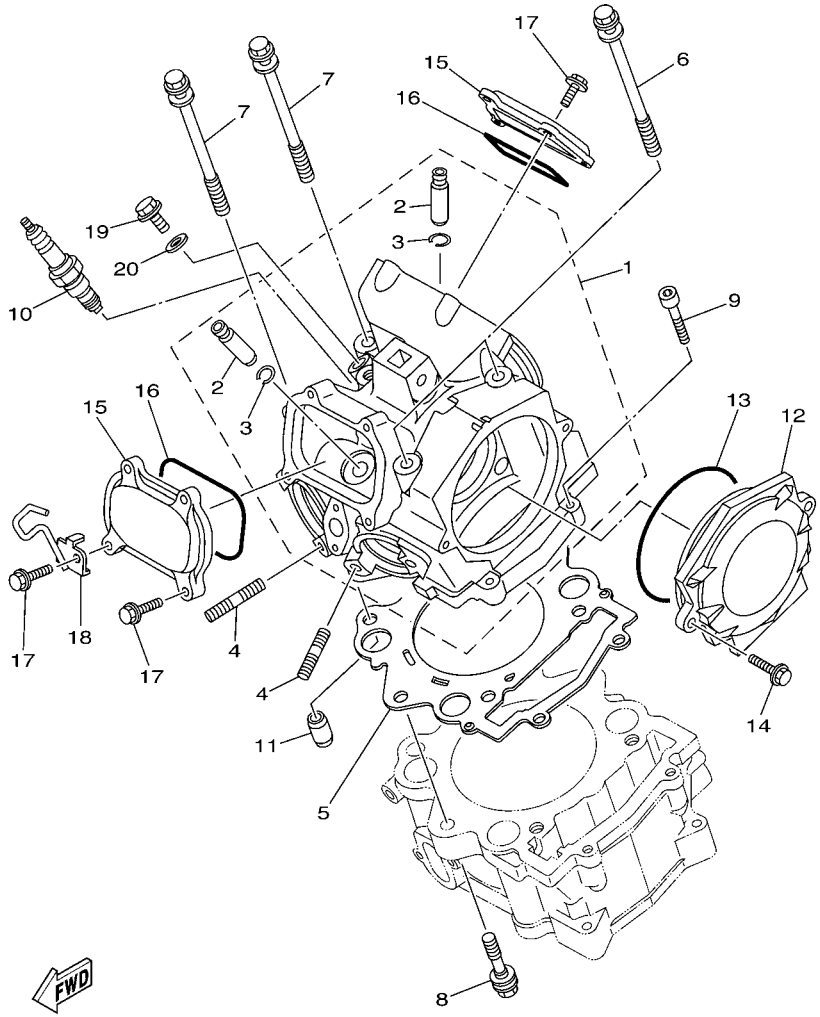

1S31100-E010

FIG. 1 CYLINDER HEAD

REF. NO.	PART NO.	DESCRIPTION	USA	CAN	EUR	OCE		REMARKS
1	1S3–11101–00	CYLINDER HEAD ASSY	1	1	1	1		
2	4G0–11133–11	.GUIDE, VALVE 1	4	4	4	4		
3	93440–10085	.CIRCLIP	4	4	4	4		
4	95612–08625	BOLT, STUD	4	4	4	4		
5	3B4–11181–00	GASKET, CYLINDER HEAD 1	1	1	1	1		
6	90109–09003	BOLT	2	2	2	2		
7	90109–09002	BOLT	2	2	2	2		
8	90109–09005	BOLT	2	2	2	2		
9	91312–06030	BOLT	2	2	2	2		
10	94701–00330	PLUG, SPARK (NGK CR8E)	1	1	1	1		
11	93612–16254	PIN, DOWEL	2	2	2	2		
12	1S3–11185–00	COVER, CYLINDER HEAD SIDE 1	1	1	1	1		
13	93210–96601	O-RING	1	1	1	1		
14	95022–06020	BOLT, FLANGE	2	2	2	2		
15	1S3–11186–00	COVER, CYLINDER HEAD SIDE 2	2	2	2	2		
16	93210–78544	O-RING	2	2	2	2		
17	95022–06020	BOLT, FLANGE	8	8	8	8		
18	1S3–1131E–00	HOLDER 1	1	1	1	1		
19	90401–08004	BOLT, UNION	1	1	1	1		
20	90430–08119	GASKET	1	1	1	1		

FIG. 2 CYLINDER

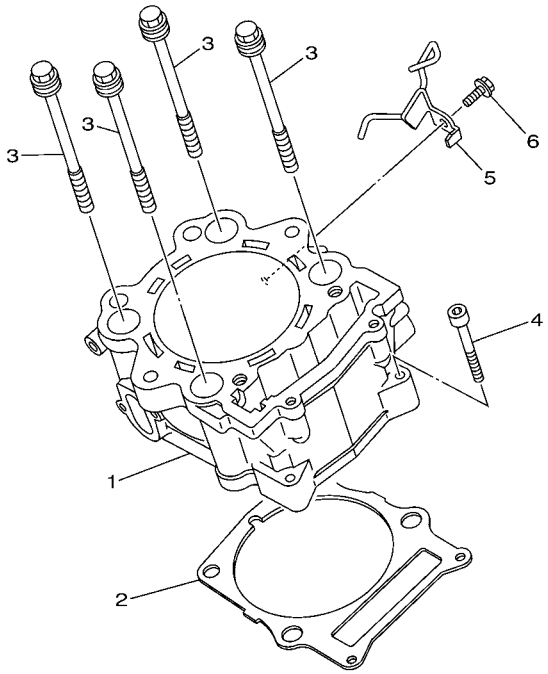

1S31100-E020

REF. NO.	PART NO.	DESCRIPTION	USA	CAN	EUR	OCE		REMARKS
1	1S3–11310–00	CYLINDER	1	1	1	1		
2	1S3–11351–00	GASKET, CYLINDER	1	1	1	1		
3	90119–10023	BOLT, WITH WASHER	4	4	4	4		
4	91312–06040	BOLT	2	2	2	2		
5	1S3–11395–00	HOLDER	1	1	1	1		
6	95822–06012	BOLT, FLANGE	1	1	1	1		

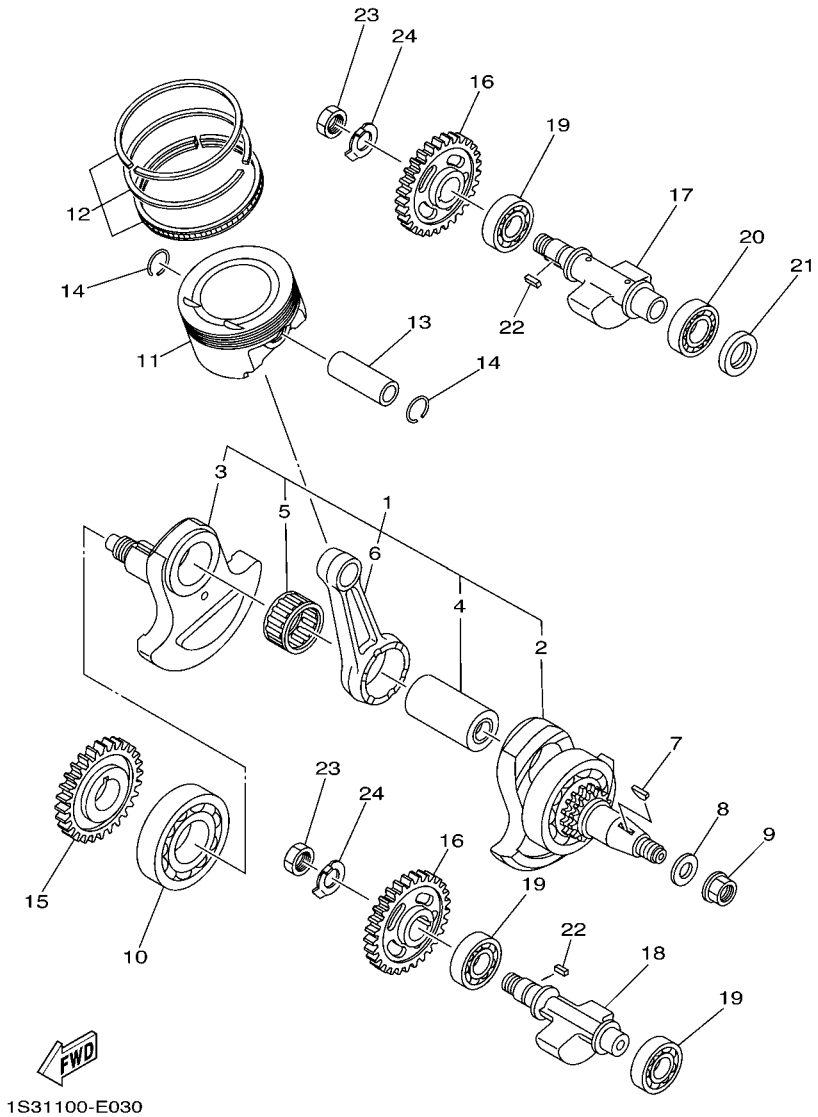

FIG. 3 CRANKSHAFT & PISTON

REF. NO.	PART NO.	DESCRIPTION	USA	CAN	EUR	OCE		REMARKS
1	1S3–11400–00	CRANKSHAFT ASSY	1	1	1	1		
2	1S3–11401–09	.CRANK SUB ASSY 1	1	1	1	1		
3	1S3–11422–00	.CRANK 2	1	1	1	1		
4	1S3–11681–00	.PIN, CRANK 1	1	1	1	1		
5	93310–84017	.BEARING	1	1	1	1		
6	1S3–11651–00	.ROD, CONNECTING	1	1	1	1		
7	90280–05001	KEY, WOODRUFF	1	1	1	1		
8	90201–16013	WASHER, PLATE	1	1	1	1		
9	90179–16004	NUT	1	1	1	1		
10	93306–30810	BEARING	1	1	1	1		
11	1S3–11631–10	PISTON (STD)	1	1	1	1		
12	1S3–11603–10	PISTON RING SET (STD)	1	1	1	1		
13	5VK–11633–00	PIN, PISTON	1	1	1	1		
14	93450–24154	CIRCLIP	2	2	2	2		
15	1S3–11536–00	GEAR, DRIVE	1	1	1	1		
16	1S3–11531–00	GEAR, BALANCE WEIGHT	2	2	2	2		
17	1S3–11454–00	WEIGHT 1	1	1	1	1		
18	1S3–11464–00	WEIGHT 2	1	1	1	1		
19	93306–20481	BEARING	3	3	3	3		
20	93306–00502	BEARING	1	1	1	1		
21	93101–25106	OIL SEAL	1	1	1	1		
22	90282–05005	KEY, STRAIGHT	2	2	2	2		
23	90170–16326	NUT	2	2	2	2		
24	90215–16221	WASHER, LOCK	2	2	2	2		

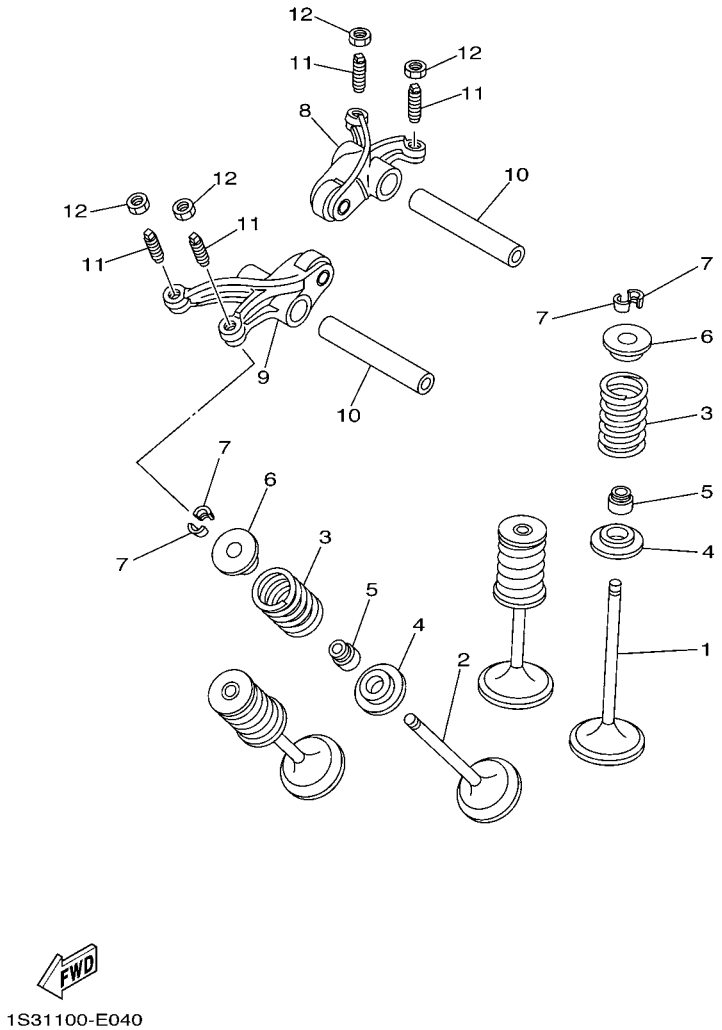

FIG. 4 VALVE

REF. NO.	PART NO.	DESCRIPTION	USA	CAN	EUR	OCE		REMARKS
1	5VK–12111–00	VALVE, INTAKE	2	2	2	2		
2	5VK–12121–00	VALVE, EXHAUST	2	2	2	2		
3	1S3–12113–00	SPRING, VALVE INNER	4	4	4	4		
4	3YF–12116–00	SEAT, VALVE SPRING	4	4	4	4		
5	5H0–12119–00	SEAL, VALVE STEM	4	4	4	4		
6	3YF–12117–01	RETAINER, VALVE SPRING	4	4	4	4		
7	4G0–12118–00	COTTER, VALVE	8	8	8	8		
8	5VK–12151–00	ARM, VALVE ROCKER	1	1	1	1		
9	5VK–12161–00	ARM, VALVE ROCKER 2	1	1	1	1		
10	5VK–12146–00	SHAFT, ROCKER	2	2	2	2		
11	5XT–12159–00	SCREW, VALVE ADJUSTING	4	4	4	4		
12	90170–06128	NUT	4	4	4	4		

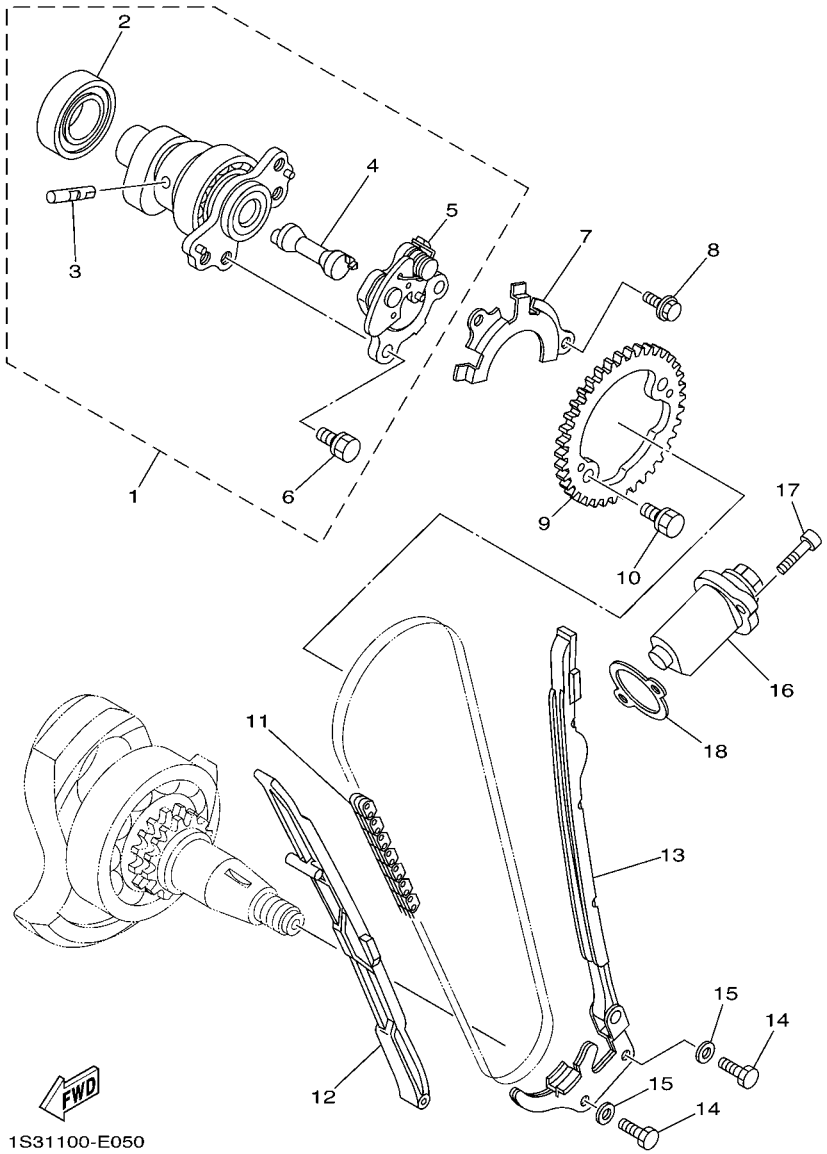

FIG. 5 CAMSHAFT & CHAIN

REF. NO.	PART NO.	DESCRIPTION	USA	CAN	EUR	OCE		REMARKS
1	1S3–12170–01	CAMSHAFT ASSY 1	1	1	1	1		
2	93306–07209	.BEARING	1	1	1	1		
3	5VK–12284–00	.PIN, DECOMPRESSION LEVER	1	1	1	1		
4	1S3–12290–00	.LEVER, DECOMPRESSION SPRING	1	1	1	1		
5	1S3–12280–01	.DECOMPRESSION ASSY	1	1	1	1		
6	90105–07004	.BOLT, FLANGE	2	2	2	2		
7	5VK–1111F–00	PLATE	1	1	1	1		
8	90105–06078	BOLT, FLANGE	2	2	2	2		
9	1S3–12176–00	SPROCKET, CAM CHAIN	1	1	1	1		
10	90105–07004	BOLT, FLANGE	2	2	2	2		
11	94591–57126	CHAIN (98XRH2010-126M)	1	1	1	1		
12	5VK–12231–00	GUIDE, STOPPER 1	1	1	1	1		
13	1S3–12241–00	GUIDE, STOPPER 2	1	1	1	1		
14	97022–06016	BOLT	2	2	2	2		
15	92902–06600	WASHER, PLATE	2	2	2	2		
16	3TB–12210–00	TENSIONER ASSY, CAM CHAIN	1	1	1	1		
17	91312–06025	BOLT	2	2	2	2		
18	4DW–12213–00	GASKET, TENSIONER CASE	1	1	1	1		

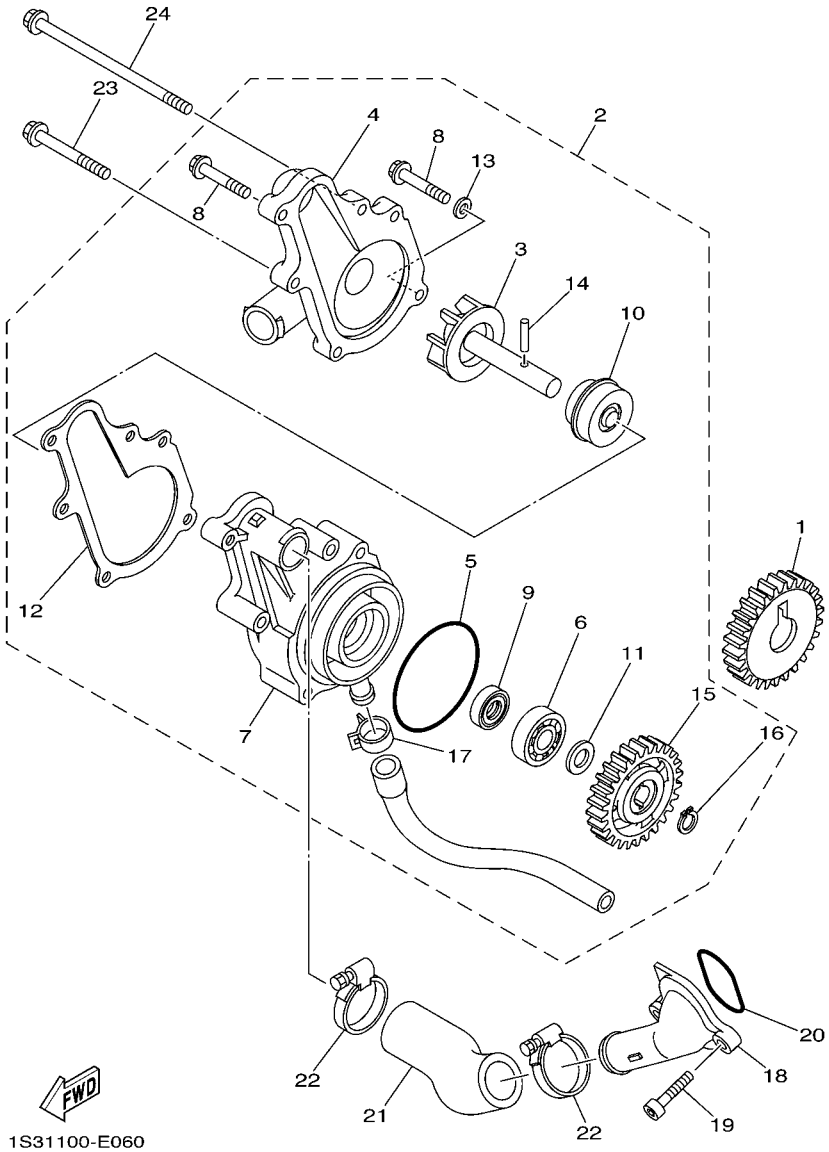

FIG. 6 WATER PUMP

REF. NO.	PART NO.	DESCRIPTION	USA	CAN	EUR	OCE		REMARKS
1	1S3–12436–00	GEAR, DRIVE	1	1	1	1		
2	1S3–12420–00	WATER PUMP ASSY	1	1	1	1		
3	1S3–12450–00	.IMPELLER SHAFT ASSY	1	1	1	1		
4	1S3–12422–00	.COVER, HOUSING	1	1	1	1		
5	93210–61750	.O-RING	1	1	1	1		
6	93306–00106	.BEARING	1	1	1	1		
7	1S3–12421–00	.HOUSING, WATER PUMP	1	1	1	1		
8	95022–06025	.BOLT, FLANGE	3	3	3	3		
9	93101–12173	.OIL SEAL	1	1	1	1		
10	11H–12438–10	.SEAL, MECHANICAL	1	1	1	1		
11	90201–12541	.WASHER, PLATE	1	1	1	1		
12	1S3–12428–00	.GASKET, HOUSING COVER 2	1	1	1	1		
13	90430–06014	.GASKET	1	1	1	1		
14	93603–16219	.PIN, DOWEL	1	1	1	1		
15	5VK–12459–00	.GEAR, IMPELLER SHAFT	1	1	1	1		
16	99009–12400	.CIRCLIP	1	1	1	1		
17	90467–13062	.CLIP	1	1	1	1		
18	1S3–12469–00	JOINT 1	1	1	1	1		
19	91312–06020	BOLT	2	2	2	2		
20	93210–33786	O-RING	1	1	1	1		
21	1S3–12577–00	HOSE 2	1	1	1	1		
22	90450–32015	HOSE CLAMP ASSY	2	2	2	2		
23	95022–06050	BOLT, FLANGE	2	2	2	2		
24	95022–06110	BOLT, FLANGE	1	1	1	1		

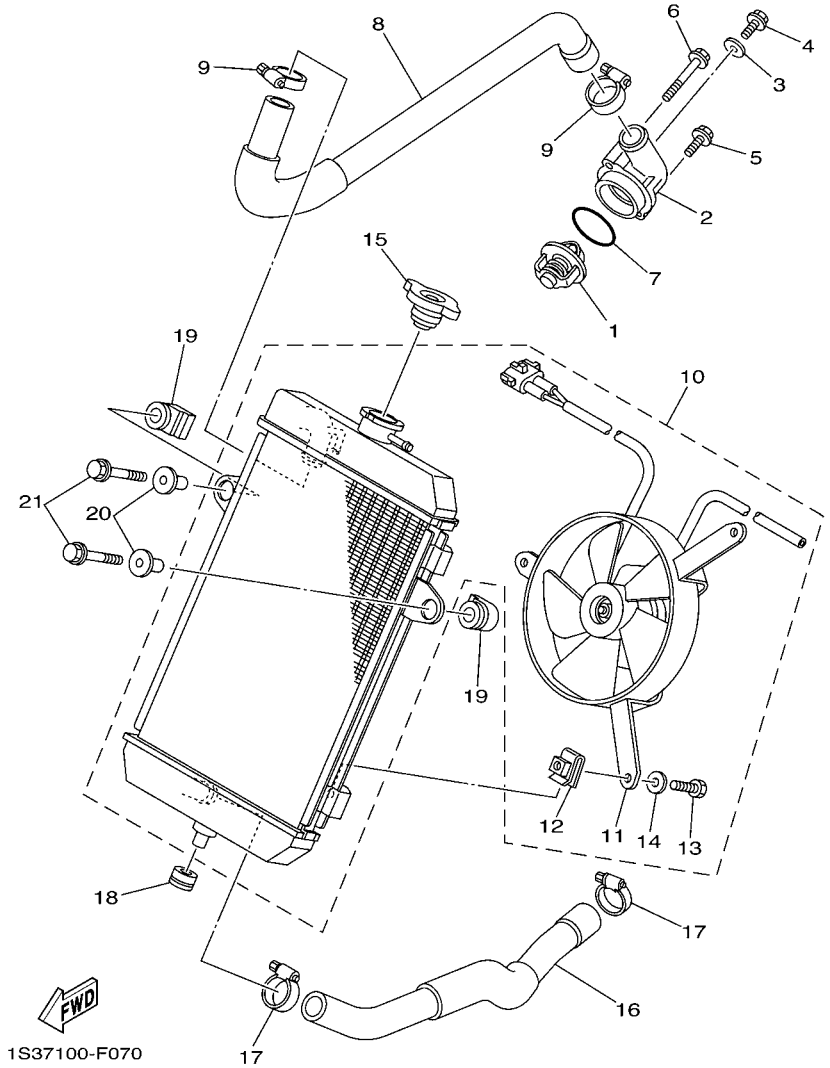

FIG. 7 RADIATOR & HOSE

REF. NO.	PART NO.	DESCRIPTION	USA	CAN	EUR	OCE		REMARKS
1	5VK–12410–00	THERMOSTAT ASSY	1	1	1	1		
2	1S3–12413–00	COVER, THERMOSTAT	1	1	1	1		
3	90430–06014	GASKET	1	1	1	1		
4	95022–06010	BOLT, FLANGE	1	1	1	1		
5	95022–06020	BOLT, FLANGE	1	1	1	1		
6	95022–06045	BOLT, FLANGE	1	1	1	1		
7	93210–41042	O-RING	1	1	1	1		
8	1S3–12578–00	HOSE 3	1	1	1	1		
9	90450–32015	HOSE CLAMP ASSY	2	2	2	2		
10	1S3–1240A–00	RADIATOR ASSY	1	1	1	1		
11	1S3–12405–00	.BLOWER ASSY	1	1	1	1		
12	1AA–12535–00	.PLATE	3	3	3	3		
13	97017–06010	.BOLT	3	3	3	3		
14	92907–06600	.WASHER, PLATE	3	3	3	3		
15	22W–12462–00	CAP, RADIATOR	1	1	1	1		
16	1S3–12579–00	HOSE 4	1	1	1	1		
17	90450–32015	HOSE CLAMP ASSY	2	2	2	2		
18	90480–18330	GROMMET	1	1	1	1		
19	1S3–12465–00	DAMPER, RADIATOR	2	2	2	2		
20	90387–06166	COLLAR	2	2	2	2		
21	95802–06030	BOLT, FLANGE	2	2	2	2		

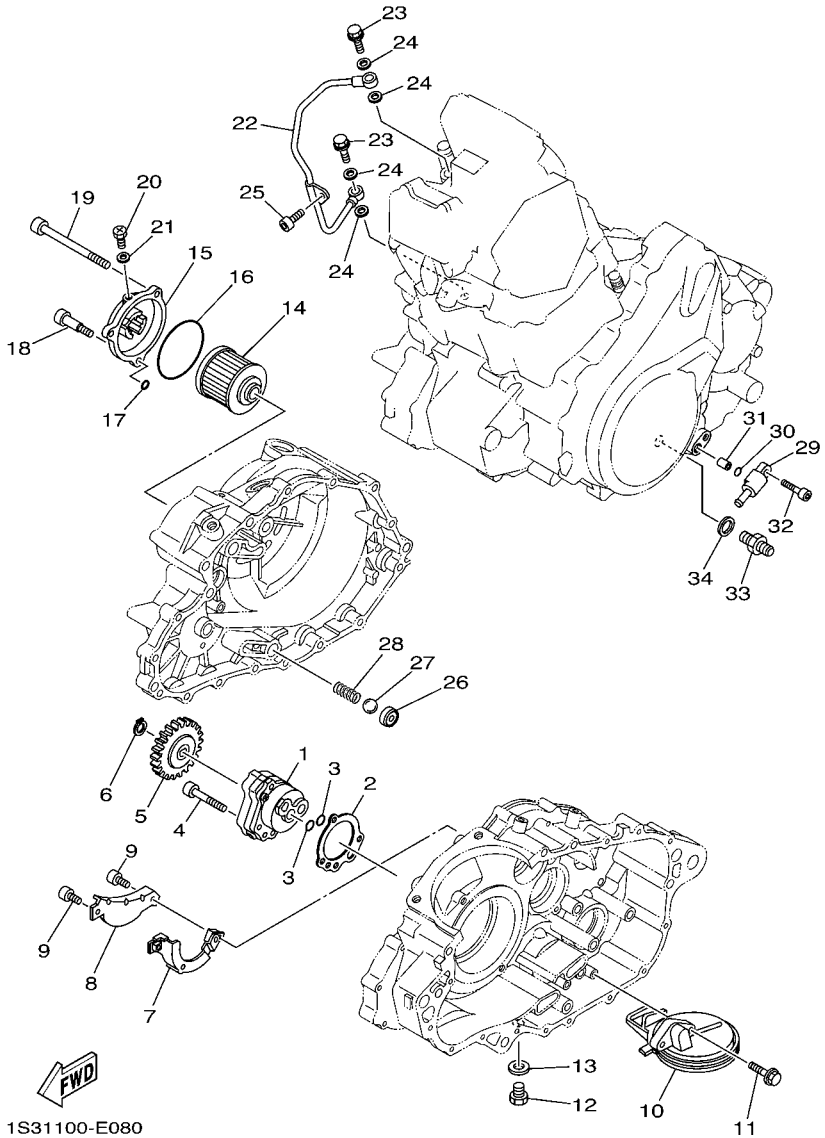

FIG. 8 OIL PUMP

REF. NO.	PART NO.	DESCRIPTION	USA	CAN	EUR	OCE		REMARKS
1	5LP–13300–00	OIL PUMP ASSY	1	1	1	1		
2	5LP–13329–00	GASKET, PUMP COVER	1	1	1	1		
3	93210–13361	O-RING	2	2	2	2		
4	91312–06035	BOLT	3	3	3	3		
5	3AJ–13325–00	GEAR, PUMP DRIVEN	1	1	1	1		
6	99009–11400	CIRCLIP	1	1	1	1		
7	1S3–13356–00	COVER, PUMP 2	1	1	1	1		
8	1S3–13327–00	COVER, PUMP GEAR	1	1	1	1		
9	90110–05030	BOLT, HEXAGON SOCKET HEAD	2	2	2	2		
10	1S3–13410–00	STRAINER HOUSING ASSY	1	1	1	1		
11	90105–06082	BOLT, FLANGE	2	2	2	2		
12	90340–14029	PLUG, STRAIGHT SCREW	1	1	1	1		
13	214–11198–01	GASKET	1	1	1	1		
14	4X7–13440–01	ELEMENT ASSY, OIL CLEANER	1	1	1	1		
15	1S3–13447–00	COVER, OIL ELEMENT	1	1	1	1		
16	93210–64297	O-RING	1	1	1	1		
17	93210–07135	O-RING	1	1	1	1		
18	90109–06169	BOLT	1	1	1	1		
19	91312–06095	BOLT	2	2	2	2		
20	90149–05018	SCREW	1	1	1	1		
21	90430–05126	GASKET	1	1	1	1		
22	1S3–13171–00	PIPE, DELIVERY 2	1	1	1	1		
23	90401–10024	BOLT, UNION	2	2	2	2		
24	90430–10188	GASKET	4	4	4	4		
25	91312–06012	BOLT	1	1	1	1		
26	583–13113–00	SEAT, CHECK BALL	1	1	1	1		
27	93503–08007	BALL	1	1	1	1		

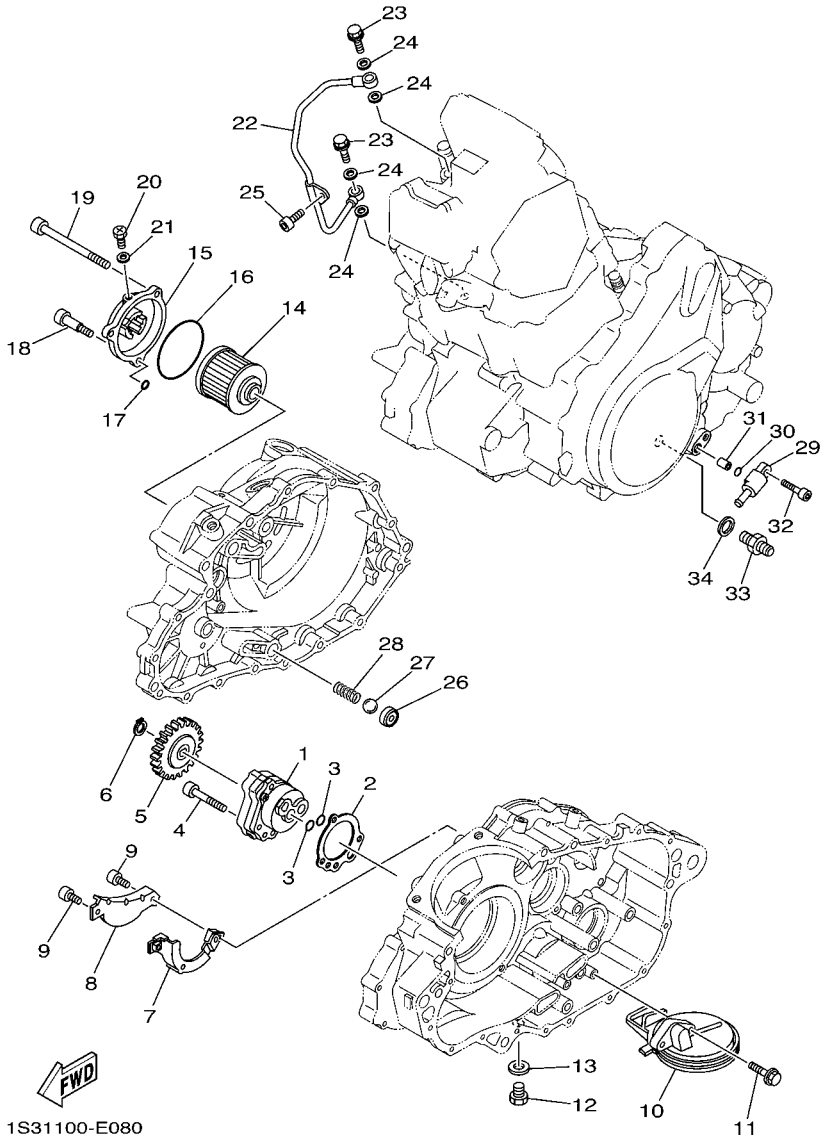

FIG. 8 OIL PUMP

REF. NO.	PART NO.	DESCRIPTION	USA	CAN	EUR	OCE		REMARKS
28	90501–043E0	SPRING, COMPRESSION	1	1	1	1		
29	1S3–13416–00	PIPE, OIL 1	1	1	1	1		
30	93210–10197	O-RING	1	1	1	1		
31	99530–10114	PIN, DOWEL	1	1	1	1		
32	95022–06025	BOLT, FLANGE	1	1	1	1		
33	1S3–13132–00	JOINT	1	1	1	1		
34	90430–14043	GASKET	1	1	1	1		

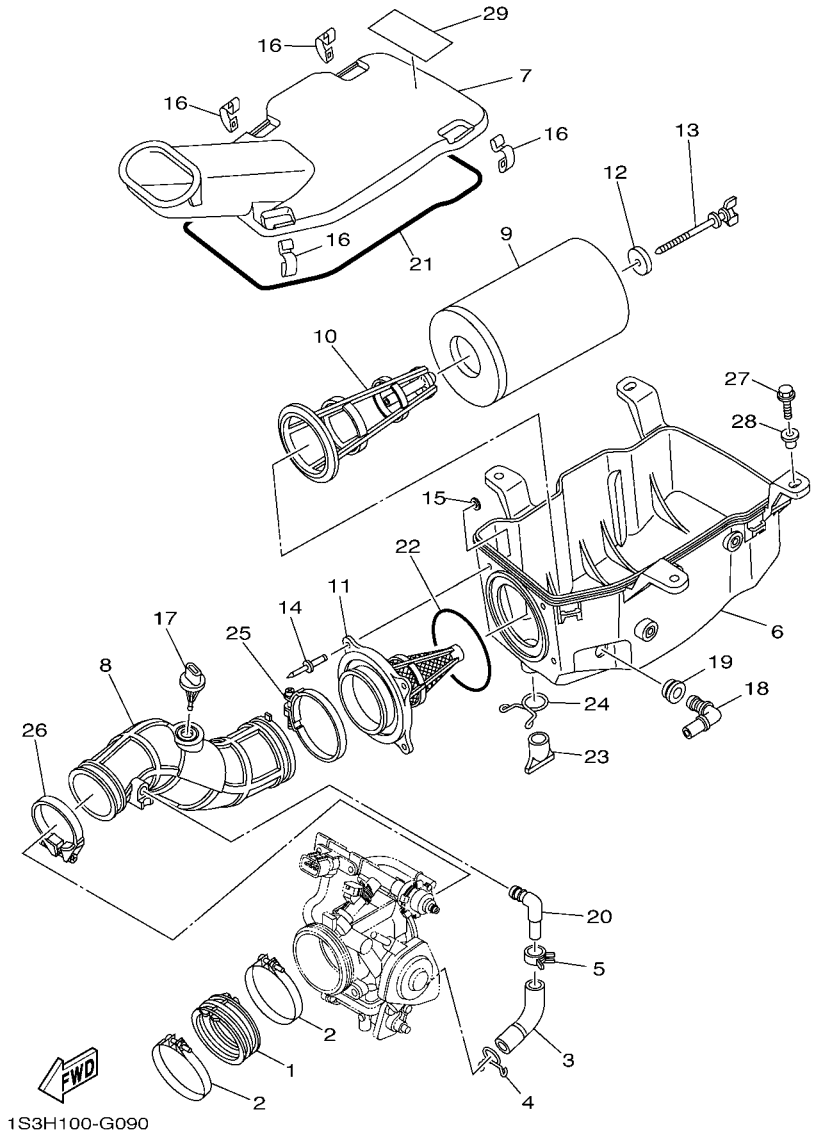

FIG. 9 INTAKE

REF. NO.	PART NO.	DESCRIPTION	USA	CAN	EUR	OCE		REMARKS
1	5VK–13586–00	JOINT, CARBURETOR 1	1	1	1	1		
2	90450–72003	HOSE CLAMP ASSY	2	2	2	2		
3	1S3–13545–00	HOSE 1	1	1	1	1		
4	90467–160A4	CLIP	1	1	1	1		
5	90467–15012	CLIP	1	1	1	1		
6	1S3–14411–00	CASE, AIR CLEANER 1	1	1	1	1		
7	1S3–14412–01	CAP, CLEANER CASE 1	1	1	1	1		
8	1S3–14453–00	JOINT, AIR CLEANER 1	1	1	1	1		
9	1S3–14451–00	ELEMENT, AIR CLEANER	1	1	1	1		
10	1S3–14458–00	GUIDE	1	1	1	1		
11	1S3–14459–01	HOLDER, GUIDE	1	1	1	1		
12	90209–06096	WASHER	1	1	1	1		
13	90122–06010	BOLT, WING	1	1	1	1		
14	90267–48138	RIVET, BLIND	4	4	4	4		
15	90201–04028	WASHER, PLATE	4	4	4	4		
16	5GH–14436–00	HOOK	4	4	4	4		
17	5VU–85886–00	SENSOR, AIR TEMPRATURE	1	1	1	1		
18	5KM–14419–00	PIPE	1	1	1	1		
19	31A–14435–00	GROMMET	1	1	1	1		
20	31A–14419–00	PIPE	1	1	1	1		
21	10M–14457–00	SEAL	1	1	1	1		
22	1S3–14457–00	SEAL	1	1	1	1		
23	59V–14457–00	SEAL	1	1	1	1		
24	90467–220A1	CLIP	1	1	1	1		
25	90460–75020	CLAMP, HOSE	1	1	1	1		
26	90450–59006	HOSE CLAMP ASSY	1	1	1	1		
27	90105–06084	BOLT, FLANGE	4	4	4	4		

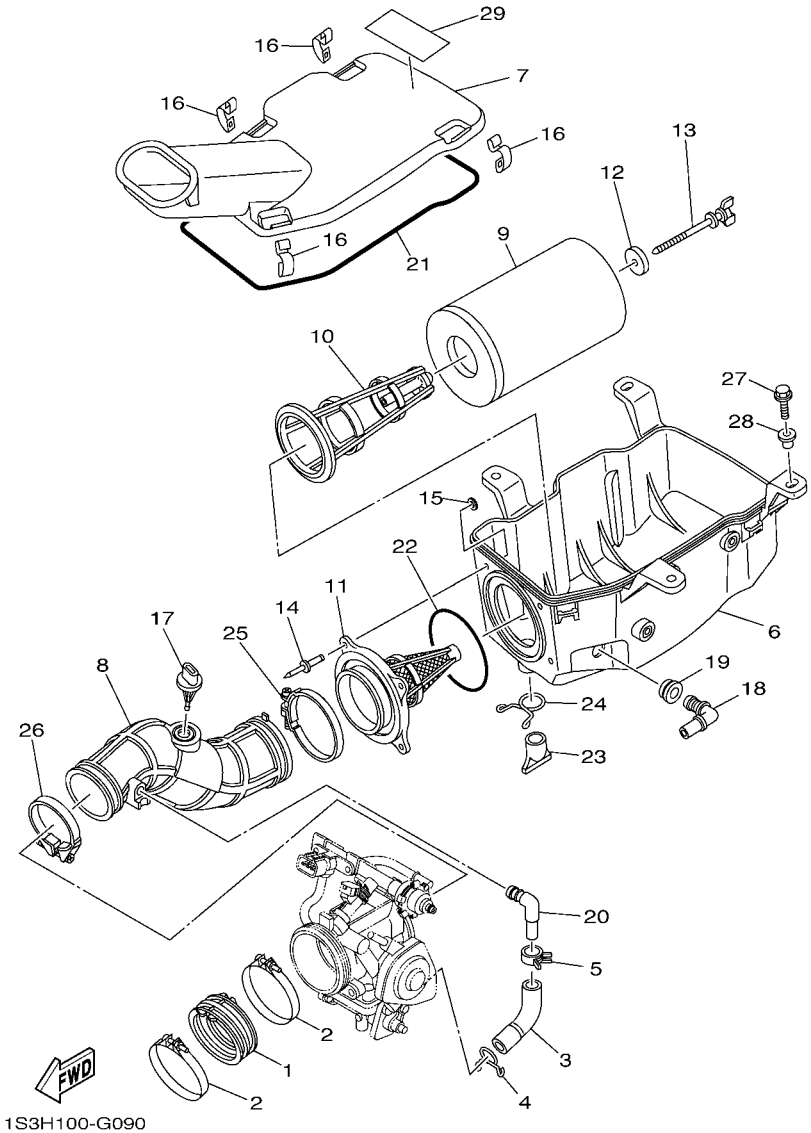

FIG. 9 INTAKE

REF. NO.	PART NO.	DESCRIPTION	USA	CAN	EUR	OCE		REMARKS
28	90387–08073	COLLAR	4	4	4	4		
29	1S3–2177C–20	PLATE, EPA OFFROAD ATV 1	1					

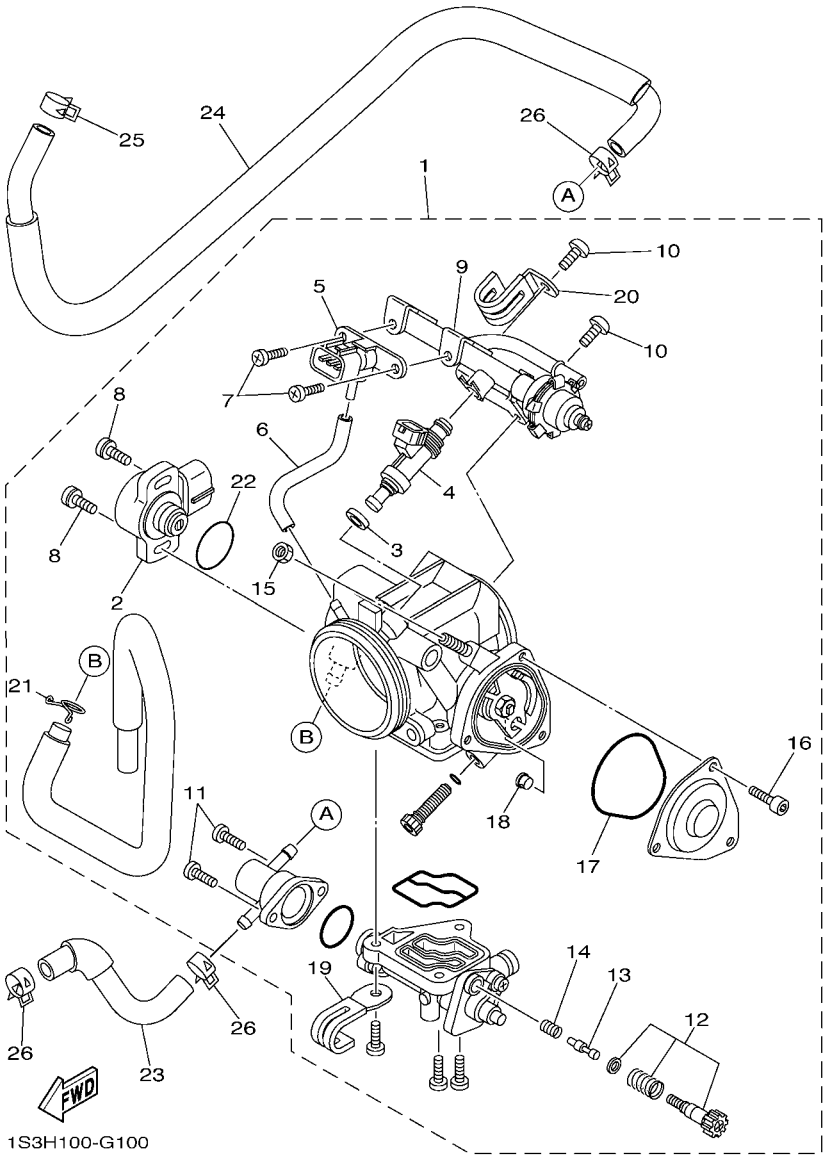

FIG. 10 THROTTLE BODY ASSY 1

REF. NO.	PART NO.	DESCRIPTION	USA	CAN	EUR	OCE		REMARKS
1	1S3–13750–10	THROTTLE BODY ASSY	1	1	1	1		
2	8GL–85885–00	.THROTTLE SENSOR ASSY	1	1	1	1		
3	8FP–13556–00	.GASKET, MANIFOLD	1	1	1	1		
4	5VK–13761–00	.INJECTOR	1	1	1	1		
5	1C7–82380–00	.SENSOR, PRESSURE	1	1	1	1		
6	5JW–14348–00	.PIPE 1	1	1	1	1		
7	98507–06010	.SCREW, PAN HEAD	2	2	2	2		
8	8CC–14216–10	.SCREW	2	2	2	2		
9	1S3–13160–00	.DELIVERY PIPE ASSY 1	1	1	1	1		
10	98507–06012	.SCREW, PAN HEAD	2	2	2	2		
11	98507–05012	.SCREW, PAN HEAD	2	2	2	2		
12	5VX–14503–00	.ADJUST SCREW SET	1	1	1	1		
13	1S3–13493–00	.PLUNGER	1	1	1	1		
14	4BH–14134–00	.SPRING, AIR ADJUSTING	1	1	1	1		
15	1S3–14161–00	.NUT, CABLE ADJUSTING	1	1	1	1		
16	91312–04006	.BOLT	3	3	3	3		
17	4WV–14147–10	.O-RING	1	1	1	1		
18	1UY–14155–00	.GUIDE, CABLE	1	1	1	1		
19	3JC–14146–00	.PLATE	1	1	1	1		
20	5JW–14945–00	.PLATE	1	1	1	1		
21	90467–09006	.CLIP	1	1	1	1		
22	5YP–14562–00	.O-RING	1	1	1	1		
23	1S3–1243A–00	HOSE 1	1	1	1	1		
24	1S3–1243E–00	HOSE 2	1	1	1	1		
25	90467–11090	CLIP	1	1	1	1		
26	90467–11090	CLIP	3	3	3	3		

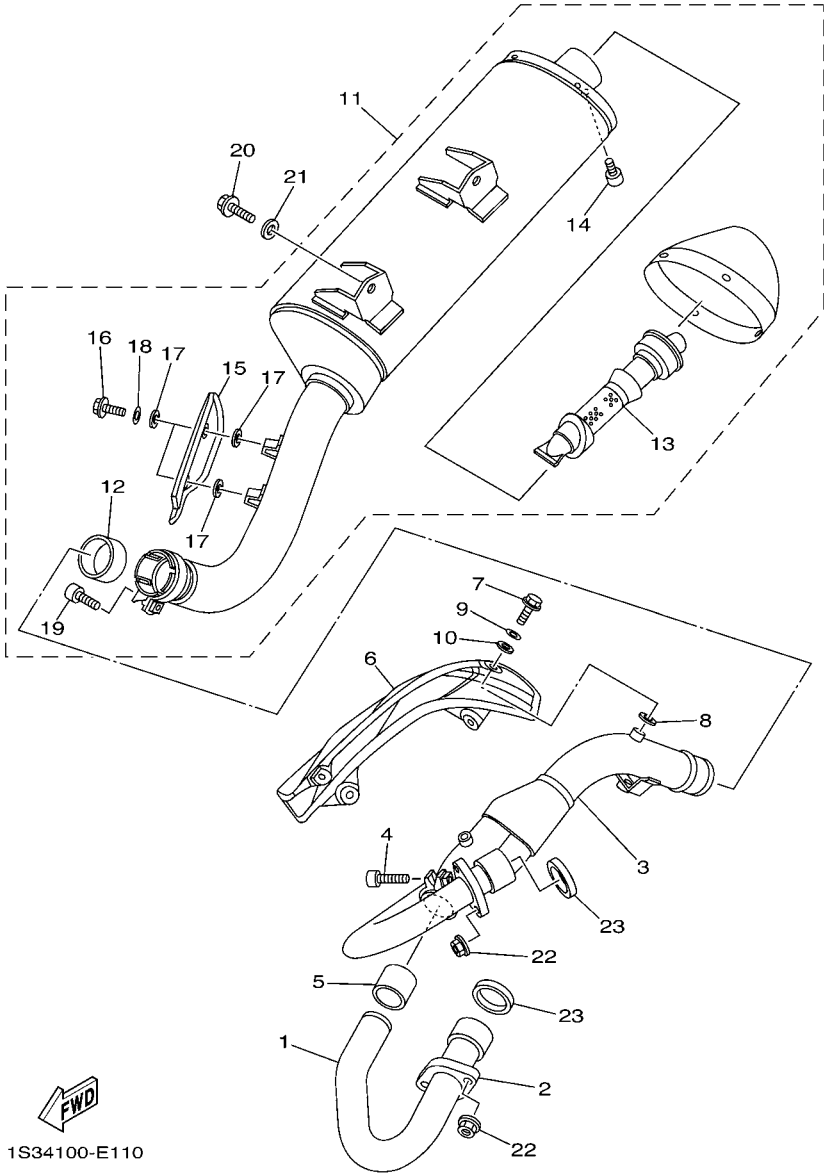

FIG. 11 EXHAUST

REF. NO.	PART NO.	DESCRIPTION	USA	CAN	EUR	OCE		REMARKS
1	1S3–14611–00	PIPE, EXHAUST 1	1	1	1	1		
2	1S3–14612–00	NUT, RING	1	1	1	1		
3	1S3–14621–01	PIPE, EXHAUST 2	1	1	1	1		
4	91314–08035	BOLT	1	1	1	1		
5	3YF–14714–00	GASKET, MUFFLER	1	1	1	1		
6	1S3–14628–00	PROTECTOR, EXHAUST PIPE	1	1	1	1		
7	95022–06012	BOLT, FLANGE	4	4	4	4		
8	90201–05015	WASHER, PLATE	4	4	4	4		
9	90201–06035	WASHER, PLATE	4	4	4	4		
10	90201–05019	WASHER, PLATE	4	4	4	4		
11	1S3–14710–10	MUFFLER ASSY 1	1	1	1	1		
12	5LP–14714–00	.GASKET, MUFFLER	1	1	1	1		
13	1S3–14752–00	.PIPE, OUTLET	1	1	1	1		
14	91312–06010	.BOLT	1	1	1	1		
15	1S3–14728–00	.PROTECTOR, MUFFLER 2	1	1	1	1		
16	98902–06010	.SCREW, BIND	2	2	2	2		
17	90201–05015	.WASHER, PLATE	4	4	4	4		
18	92902–06200	.WASHER	2	2	2	2		
19	91314–08035	.BOLT	1	1	1	1		
20	90105–08142	BOLT, FLANGE	2	2	2	2		
21	90201–08048	WASHER, PLATE	2	2	2	2		
22	95702–08500	NUT, WITH WASHER	4	4	4	4		
23	3YF–14613–01	GASKET, EXHAUST PIPE	2	2	2	2		

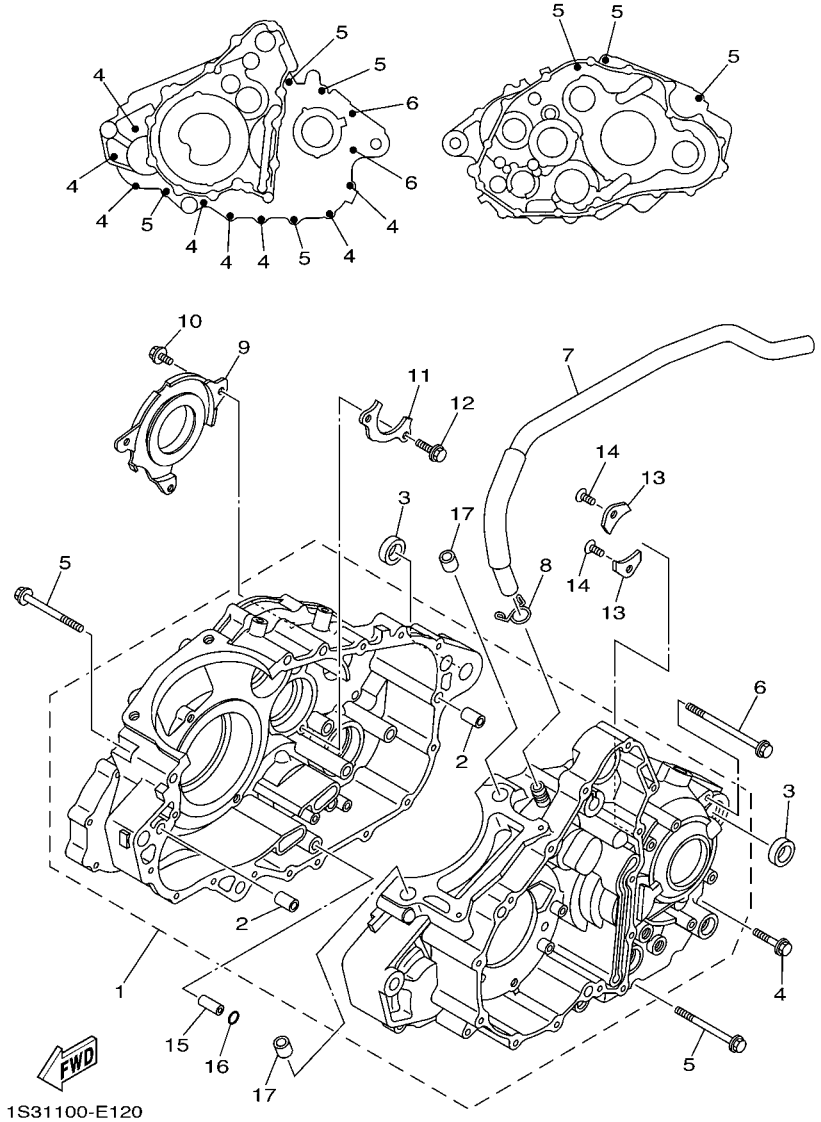

FIG. 12 CRANKCASE

REF. NO.	PART NO.	DESCRIPTION	USA	CAN	EUR	OCE		REMARKS
1	1S3–15100–01	CRANKCASE ASSY	1	1	1	1		
2	99530–10114	.PIN, DOWEL	2	2	2	2		
3	90387–17009	COLLAR	2	2	2	2		
4	95022–06030	BOLT, FLANGE	8	8	8	8		
5	95022–06070	BOLT, FLANGE	7	7	7	7		
6	95022–06090	BOLT, FLANGE	2	2	2	2		
7	1S3–11166–00	PIPE, BREATHER 1	1	1	1	1		
8	90467–140A4	CLIP	1	1	1	1		
9	1S3–11165–00	PLATE, BREATHER	1	1	1	1		
10	90105–06081	BOLT, FLANGE	3	3	3	3		
11	1S3–15383–00	PLATE, BEARING COVER	1	1	1	1		
12	90105–06082	BOLT, FLANGE	2	2	2	2		
13	4JT–15381–01	PLATE, BEARING COVER	2	2	2	2		
14	90149–06074	SCREW	2	2	2	2		
15	99530–08016	PIN, DOWEL	1	1	1	1		
16	93210–07135	O-RING	1	1	1	1		
17	99530–14016	PIN, DOWEL	2	2	2	2		

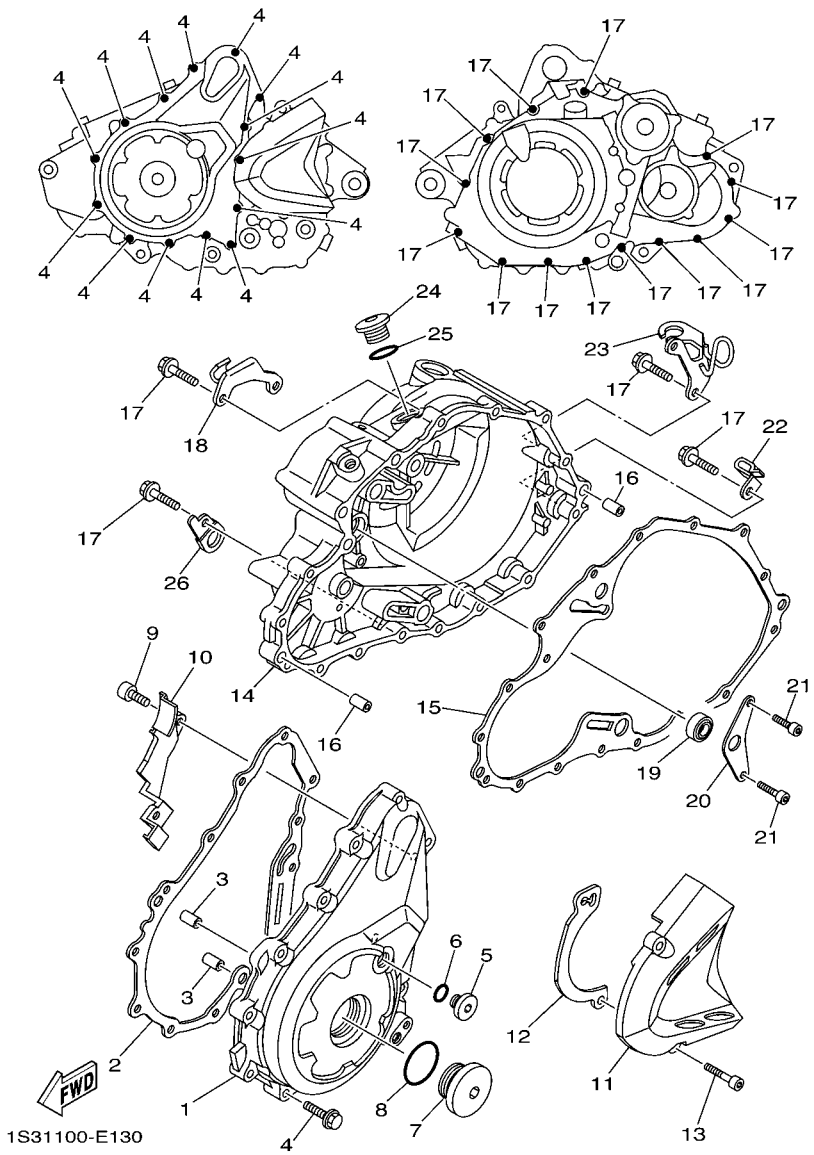

FIG. 13 CRANKCASE COVER 1

REF. NO.	PART NO.	DESCRIPTION	USA	CAN	EUR	OCE		REMARKS
1	1S3–15411–00	COVER, CRANKCASE 1	1	1	1	1		
2	1S3–15451–00	GASKET, CRANKCASE COVER 1	1	1	1	1		
3	99530–10114	PIN, DOWEL	2	2	2	2		
4	95022–06030	BOLT, FLANGE	14	14	14	14		
5	90340–14003	PLUG, STRAIGHT SCREW	1	1	1	1		
6	93210–14369	O-RING	1	1	1	1		
7	90340–36001	PLUG, STRAIGHT SCREW	1	1	1	1		
8	93210–357A3	O-RING	1	1	1	1		
9	90110–05031	BOLT, HEXAGON SOCKET HEAD	1	1	1	1		
10	1S3–15113–00	PLATE	1	1	1	1		
11	1S3–15421–00	COVER, CRANKCASE 2	1	1	1	1		
12	1S3–17466–00	GUIDE, CHAIN	1	1	1	1		
13	91312–06025	BOLT	2	2	2	2		
14	1S3–15431–00	COVER, CRANKCASE 3	1	1	1	1		
15	1S3–15462–00	GASKET, CRANKCASE COVER 3	1	1	1	1		
16	99530–10120	PIN, DOWEL	2	2	2	2		
17	95022–06030	BOLT, FLANGE	14	14	14	14		
18	1S3–15441–00	HOLDER, CLUTCH CABLE	1	1	1	1		
19	93101–14164	OIL SEAL	1	1	1	1		
20	1S3–15118–00	HOLDER	1	1	1	1		
21	90110–06182	BOLT, HEXAGON SOCKET HEAD	2	2	2	2		
22	90461–10011	CLAMP	1	1	1	1		
23	1S3–1546C–00	HOLDER	1	1	1	1		
24	1S3–15189–00	PLUG	1	1	1	1		
25	93210–207A0	O-RING	1	1	1	1		
26	90462–08046	CLAMP	1	1	1	1		

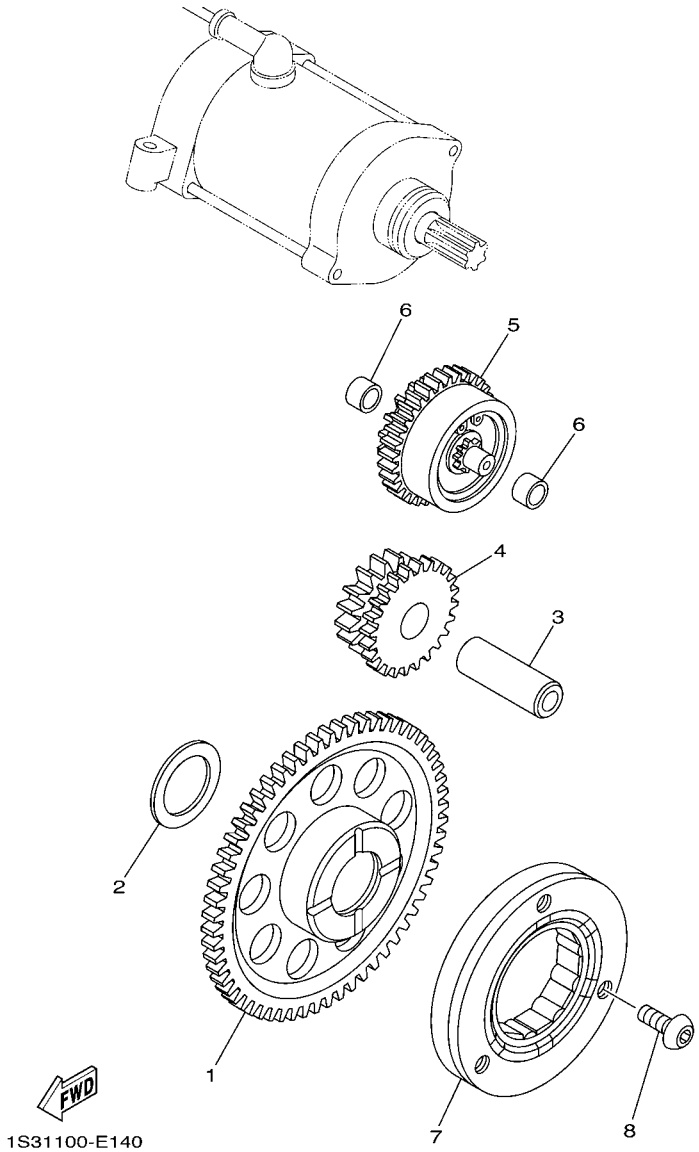

FIG. 14 STARTER

REF. NO.	PART NO.	DESCRIPTION	USA	CAN	EUR	OCE		REMARKS
1	1S3–15515–00	GEAR 3	1	1	1	1		
2	90201–286K9	WASHER, PLATE (T1.0)	1	1	1	1		
3	1VJ–15522–00	SHAFT 2	1	1	1	1		
4	1S3–15517–00	GEAR, IDLER 2	1	1	1	1		
5	1S3–15560–00	DAMPER ASSY	1	1	1	1		
6	90380–10002	BUSH, SOLID	2	2	2	2		
7	5VK–15590–00	STARTER ONE-WAY ASSY	1	1	1	1		
8	90149–08018	SCREW	3	3	3	3		

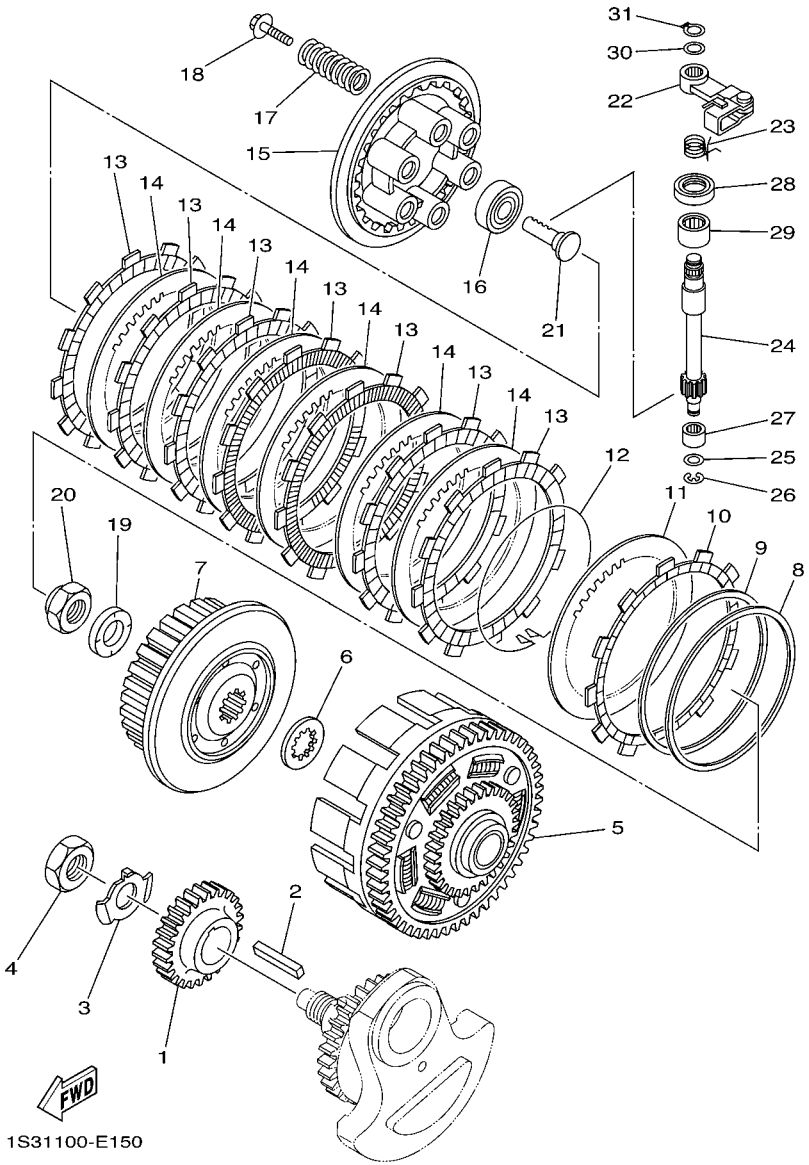

FIG. 15 CLUTCH

REF. NO.	PART NO.	DESCRIPTION	USA	CAN	EUR	OCE		REMARKS
1	1S3–16111–00	GEAR, PRIMARY DRIVE	1	1	1	1		
2	90282–07003	KEY, STRAIGHT	1	1	1	1		
3	90215–20006	WASHER, LOCK	1	1	1	1		
4	90170–20274	NUT	1	1	1	1		
5	1S3–16150–00	PRIMARY DRIVEN GEAR COMP.	1	1	1	1		
6	2JN–16154–00	PLATE, THRUST 1	1	1	1	1		
7	1S3–16371–00	BOSS, CLUTCH	1	1	1	1		
8	5JG–16384–00	PLATE, SEAT	1	1	1	1		
9	5JG–16383–00	SPRING, CLUTCH BOSS	1	1	1	1		
10	5TG–16331–00	PLATE, FRICTION 2	1	1	1	1		
11	4X7–16325–00	PLATE, CLUTCH 2	1	1	1	1		
12	4X7–16385–00	RING, CLUTCH BOSS	1	1	1	1		
13	5TA–16321–00	PLATE, FRICTION	7	7	7	7		
14	4X7–16325–00	PLATE, CLUTCH 2	6	6	6	6		
15	1S3–16351–00	PLATE, PRESSURE 1	1	1	1	1		
16	93306–00304	BEARING	1	1	1	1		
17	90501–230E4	SPRING, COMPRESSION	6	6	6	6		
18	90159–06029	SCREW, WITH WASHER	6	6	6	6		
19	90208–20001	WASHER, CONICAL SPRING	1	1	1	1		
20	90179–20007	NUT	1	1	1	1		
21	4XV–16356–01	ROD, PUSH 1	1	1	1	1		
22	3LD–16340–01	PUSH LEVER ASSY	1	1	1	1		
23	90508–18018	SPRING, TORSION	1	1	1	1		
24	5EB–16382–00	AXLE, PUSH LEVER	1	1	1	1		
25	92902–08600	WASHER, PLATE	1	1	1	1		
26	99001–07600	CIRCLIP	1	1	1	1		
27	93317–11020	BEARING	1	1	1	1		

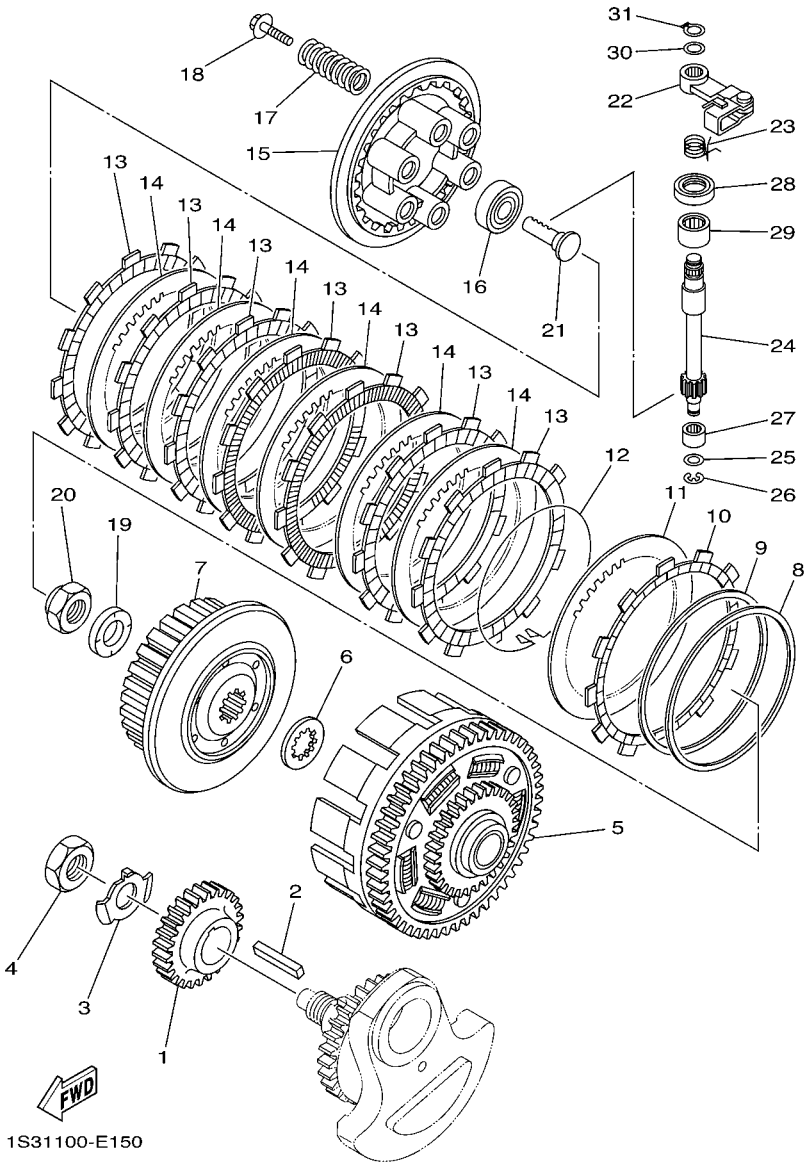

FIG. 15 CLUTCH

REF. NO.	PART NO.	DESCRIPTION	USA	CAN	EUR	OCE		REMARKS
28	93102–15212	OIL SEAL	1	1	1	1		
29	93315–31502	BEARING	1	1	1	1		
30	90201–10614	WASHER, PLATE	1	1	1	1		
31	99009–10400	CIRCLIP	1	1	1	1		

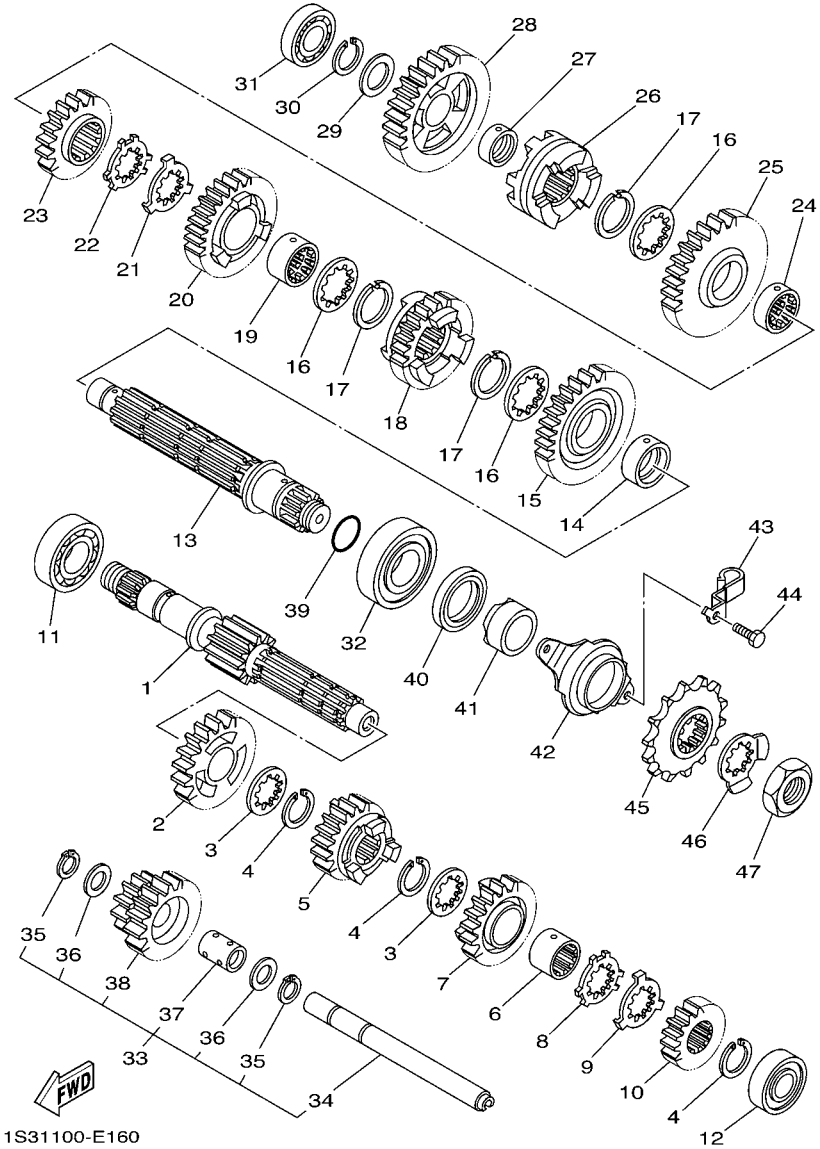

FIG. 16 TRANSMISSION

REF. NO.	PART NO.	DESCRIPTION	USA	CAN	EUR	OCE		REMARKS
1	1S3–17401–00	MAIN AXLE ASSY	1	1	1	1		
2	1S3–17151–00	GEAR, 5TH PINION (24T)	1	1	1	1		
3	90209–22008	WASHER	2	2	2	2		
4	93440–25084	CIRCLIP	3	3	3	3		
5	1S3–17131–00	GEAR, 3RD PNION (17T)	1	1	1	1		
6	90387–22006	COLLAR	1	1	1	1		
7	1S3–17141–00	GEAR, 4TH PINION (22T)	1	1	1	1		
8	90214–22003	WASHER, CLAW	1	1	1	1		
9	90214–22002	WASHER, CLAW	1	1	1	1		
10	1S3–17121–00	GEAR, 2ND PINION (14T)	1	1	1	1		
11	93306–20501	BEARING	1	1	1	1		
12	93306–00431	BEARING	1	1	1	1		
13	1S3–17402–00	DRIVE AXLE ASSY	1	1	1	1		
14	90387–28008	COLLAR	1	1	1	1		
15	1S3–17221–00	GEAR, 2ND WHEEL (28T)	1	1	1	1		
16	90209–26008	WASHER	3	3	3	3		
17	93440–28062	CIRCLIP	3	3	3	3		
18	1S3–17241–00	GEAR, 4TH WHEEL (25T)	1	1	1	1		
19	90387–26005	COLLAR	1	1	1	1		
20	1S3–17231–00	GEAR, 3RD WHEEL (25T)	1	1	1	1		
21	90214–26002	WASHER, CLAW	1	1	1	1		
22	90214–26003	WASHER, CLAW	1	1	1	1		
23	1S3–17251–00	GEAR, 5TH WHEEL (22T)	1	1	1	1		
24	90387–26004	COLLAR	1	1	1	1		
25	1S3–17211–00	GEAR, 1ST WHEEL (38T)	1	1	1	1		
26	1S3–17285–00	CLUTCH, DOG	1	1	1	1		
27	90387–20021	COLLAR	1	1	1	1		

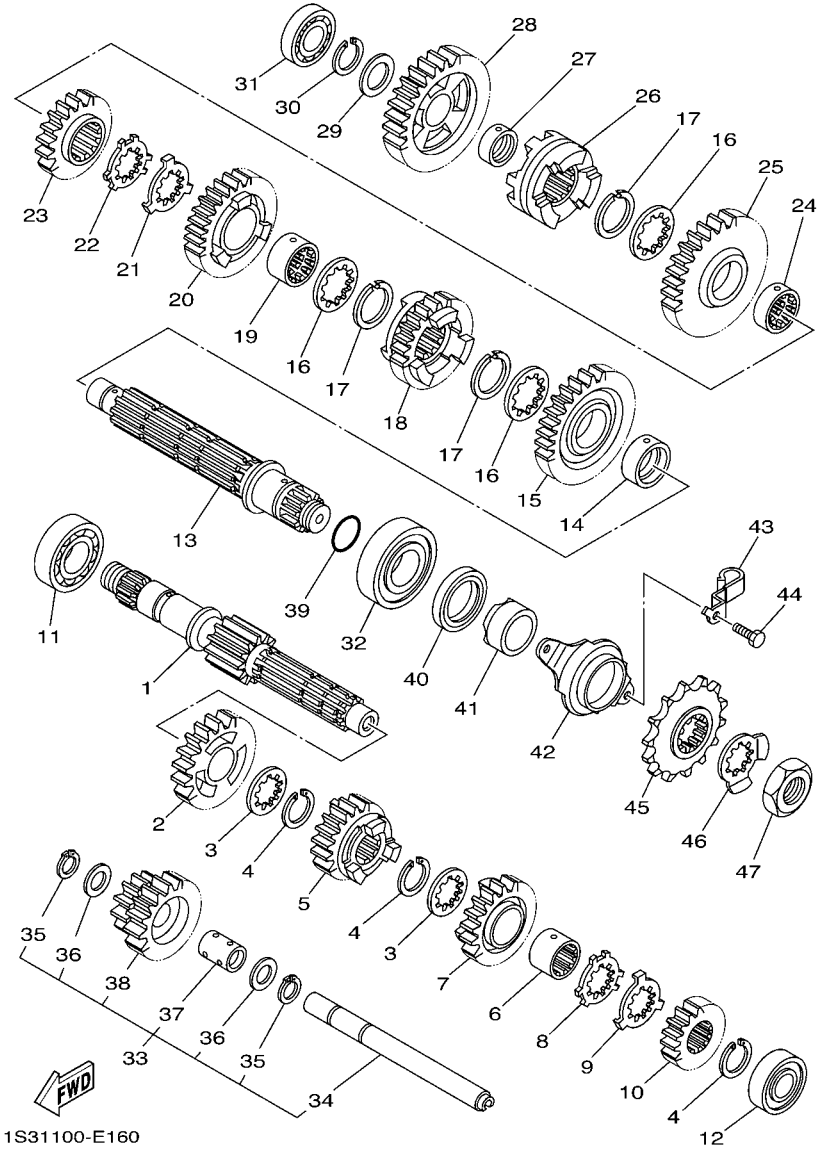

FIG. 16 TRANSMISSION

REF. NO.	PART NO.	DESCRIPTION	USA	CAN	EUR	OCE		REMARKS
28	1S3–17253–00	GEAR, REVERSE WHEEL 2 (29T)	1	1	1	1		
29	90201–20276	WASHER, PLATE (T=1.0)	1	1	1	1		
30	99009–20400	CIRCLIP	1	1	1	1		
31	93306–00415	BEARING	1	1	1	1		
32	93306–27803	BEARING	1	1	1	1		
33	1S3–17430–00	COUNTER AXLE ASSY	1	1	1	1		
34	1S3–17432–00	.AXLE, IDLE	1	1	1	1		
35	93440–15012	.CIRCLIP	2	2	2	2		
36	90201–152P4	.WASHER, PLATE	2	2	2	2		
37	90387–1504G	.COLLAR	1	1	1	1		
38	1S3–17243–00	.GEAR, REVERSE WHEEL1(12T/24T)	1	1	1	1		
39	93210–25001	O-RING	1	1	1	1		
40	93102–35393	OIL SEAL	1	1	1	1		
41	90387–28009	COLLAR	1	1	1	1		
42	1S3–17471–00	PLATE, COVER	1	1	1	1		
43	90461–10011	CLAMP	1	1	1	1		
44	97022–06014	BOLT	2	2	2	2		
45	9383G–14231	SPROCKET, DRIVE (14T)	1	1	1	1		
46	90215–25003	WASHER, LOCK	1	1	1	1		
47	90179–22011	NUT	1	1	1	1		

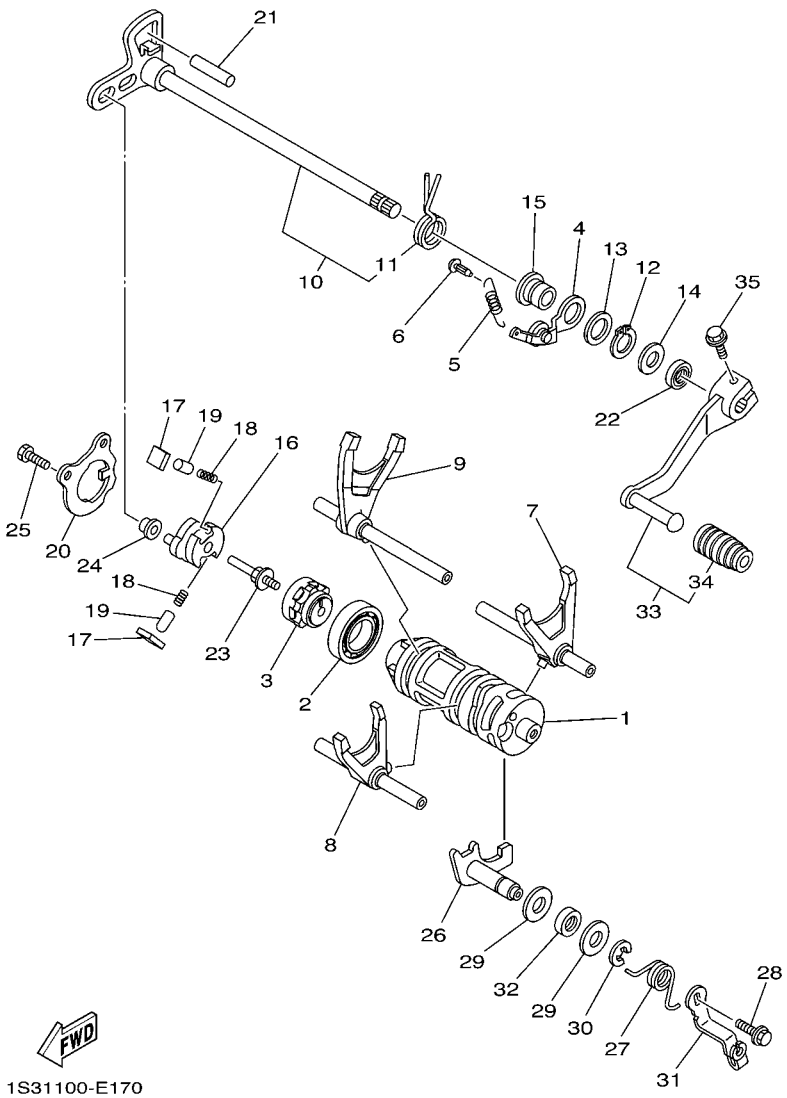

FIG. 17 SHIFT CAM & FORK

REF. NO.	PART NO.	DESCRIPTION	USA	CAN	EUR	OCE		REMARKS
1	1S3–18541–00	CAM, SHIFT	1	1	1	1		
2	93306–90509	BEARING	1	1	1	1		
3	4EW–18185–00	SEGMENT	1	1	1	1		
4	1S3–18140–00	STOPPER LEVER ASSY	1	1	1	1		
5	5JW–18144–00	HANGER, SPRING	1	1	1	1		
6	132–16346–00	HOOK, SPRING	1	1	1	1		
7	1S3–18501–00	FORK, SHIFT 1	1	1	1	1		
8	1S3–18502–00	FORK, SHIFT 2	1	1	1	1		
9	1S3–18503–00	FORK, SHIFT 3	1	1	1	1		
10	1S3–18101–00	SHIFT SHAFT ASSY	1	1	1	1		
11	90508–35007	.SPRING, TORSION	1	1	1	1		
12	99009–17400	CIRCLIP	1	1	1	1		
13	90201–177G4	WASHER, PLATE	1	1	1	1		
14	90201–12040	WASHER, PLATE	1	1	1	1		
15	5VK–18699–00	BOSS 1	1	1	1	1		
16	1S3–18122–00	LEVER, SHIFT 2	1	1	1	1		
17	3XJ–18182–00	PAWL, SHIFTER	2	2	2	2		
18	90501–052G5	SPRING, COMPRESSION	2	2	2	2		
19	3XJ–18184–00	PIN, PAWL	2	2	2	2		
20	1S3–18172–00	GUIDE, SHIFT	1	1	1	1		
21	93608–30002	PIN, DOWEL	1	1	1	1		
22	93102–12224	OIL SEAL	1	1	1	1		
23	3XJ–18173–10	PIN, SHIFT	1	1	1	1		
24	3XJ–18178–00	ROLLER, SHIFT LEVER	1	1	1	1		
25	90101–06664	BOLT	2	2	2	2		
26	1S3–18380–00	SHIFTER BRKT. ASSY	1	1	1	1		
27	5LP–18337–01	SPRING	1	1	1	1		

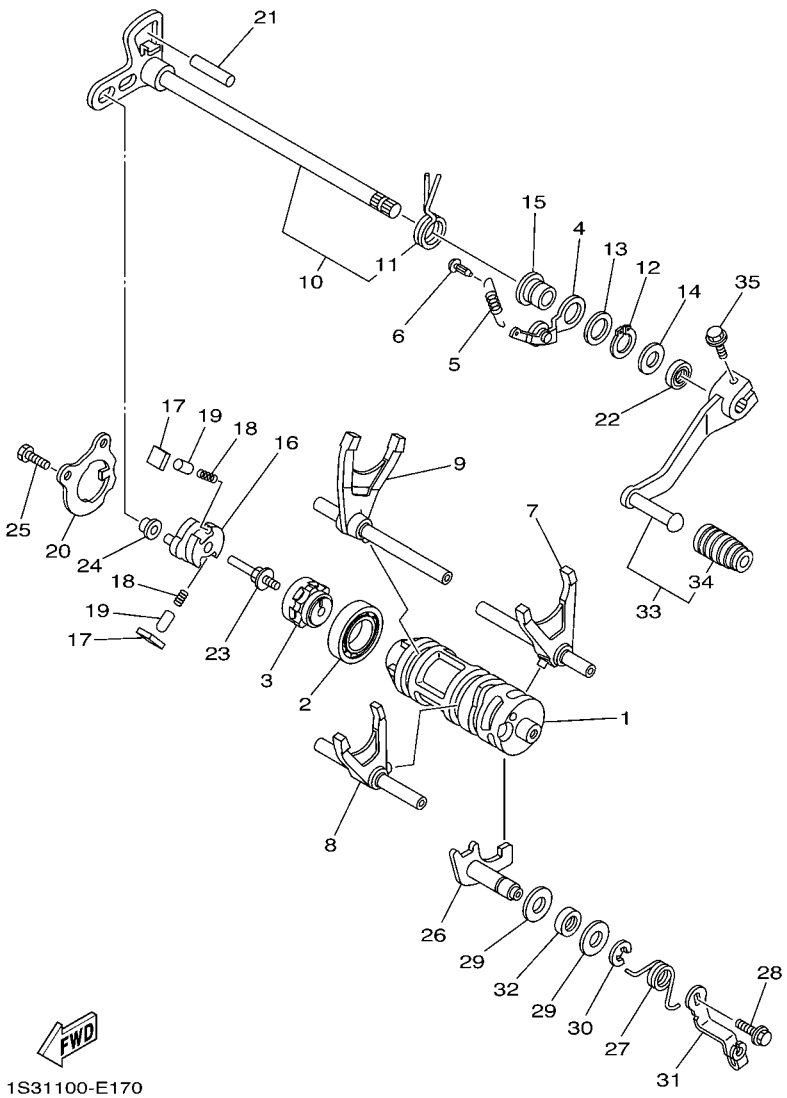

FIG. 17 SHIFT CAM & FORK

REF. NO.	PART NO.	DESCRIPTION	USA	CAN	EUR	OCE		REMARKS
28	95812–06012	BOLT, FLANGE	1	1	1	1		
29	90201–12575	WASHER, PLATE	2	2	2	2		
30	99001–10600	CIRCLIP	1	1	1	1		
31	5LP–18431–00	BRACKET, SHIFTER	1	1	1	1		
32	93102–12106	OIL SEAL (SD 12-22-5 HS)	1	1	1	1		
33	1S3–18110–10	SHIFT PEDAL ASSY	1	1	1	1		
34	5YT–18113–00	.COVER, SHIFT PEDAL	1	1	1	1		
35	90105–06142	BOLT, FLANGE	1	1	1	1		

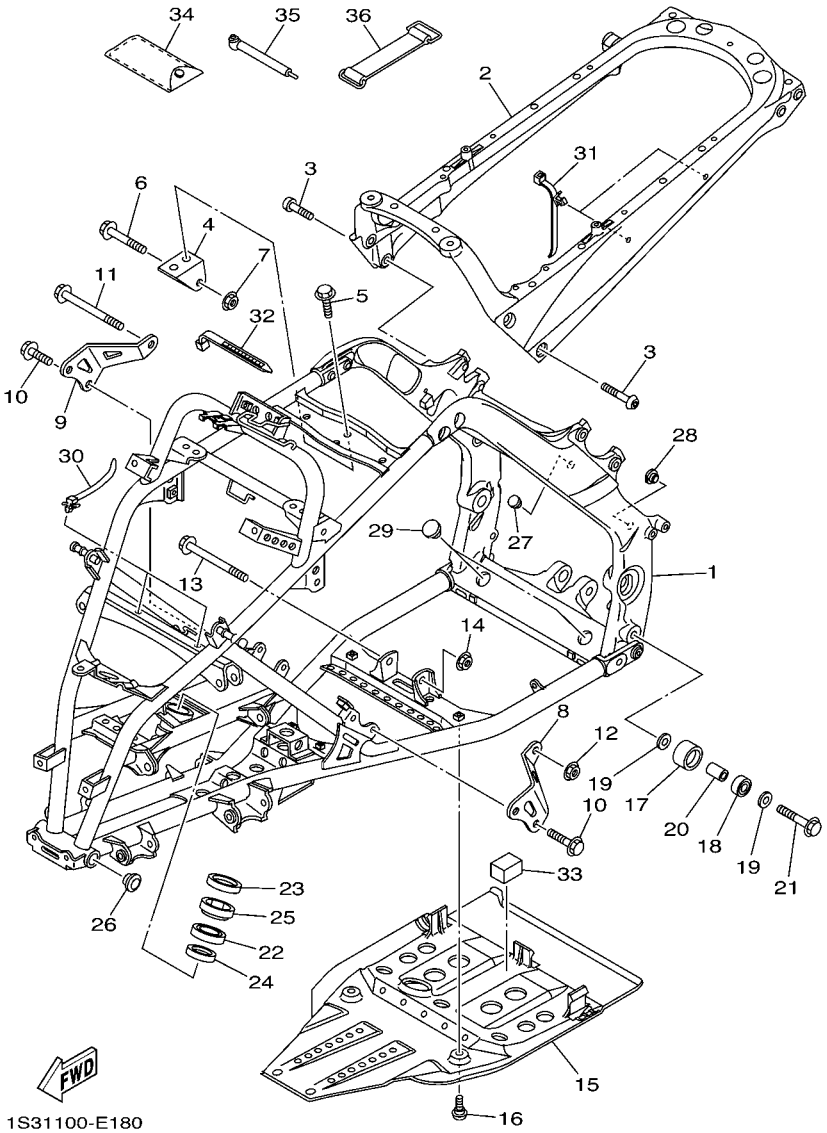

FIG. 18 FRAME

REF. NO.	PART NO.	DESCRIPTION	USA	CAN	EUR	OCE		REMARKS
1	1S3–21101–18	FRONT FRAME COMP.	1	1	1	1		
2	1S3–21190–18	REAR FRAME COMP.	1	1	1	1		
3	90149–10034	SCREW	4	4	4	4		
4	1S3–21315–10	STAY, ENGINE 2	1	1	1	1		
5	95812–08014	BOLT, FLANGE	2	2	2	2		
6	95812–10055	BOLT, FLANGE	1	1	1	1		
7	95602–10200	NUT, U FLANGE	1	1	1	1		
8	1S3–21316–10	STAY, ENGINE 3	1	1	1	1		
9	1S3–21317–10	STAY, ENGINE 3	1	1	1	1		
10	90105–08142	BOLT, FLANGE	4	4	4	4		
11	95812–10110	BOLT, FLANGE	1	1	1	1		
12	90185–10011	NUT, SELF-LOCKING	1	1	1	1		
13	95812–10090	BOLT, FLANGE	1	1	1	1		
14	90185–10011	NUT, SELF-LOCKING	1	1	1	1		
15	1S3–21471–00	PROTECTOR, ENGINE	1	1	1	1		
16	90109–06198	BOLT	4	4	4	4		
17	5TG–22178–00	TENSIONER	1	1	1	1		
18	93300–60804	BEARING	1	1	1	1		
19	90201–08043	WASHER, PLATE	2	2	2	2		
20	90387–08064	COLLAR	1	1	1	1		
21	95812–08045	BOLT, FLANGE	1	1	1	1		
22	93306–20352	BEARING	1	1	1	1		
23	93102–25081	OIL SEAL	1	1	1	1		
24	93102–25099	OIL SEAL	1	1	1	1		
25	5GT–23872–00	HOLDER, BEARING	1	1	1	1		
26	90338–26004	PLUG	2	2	2	2		
27	90338–24260	PLUG	2	2	2	2		

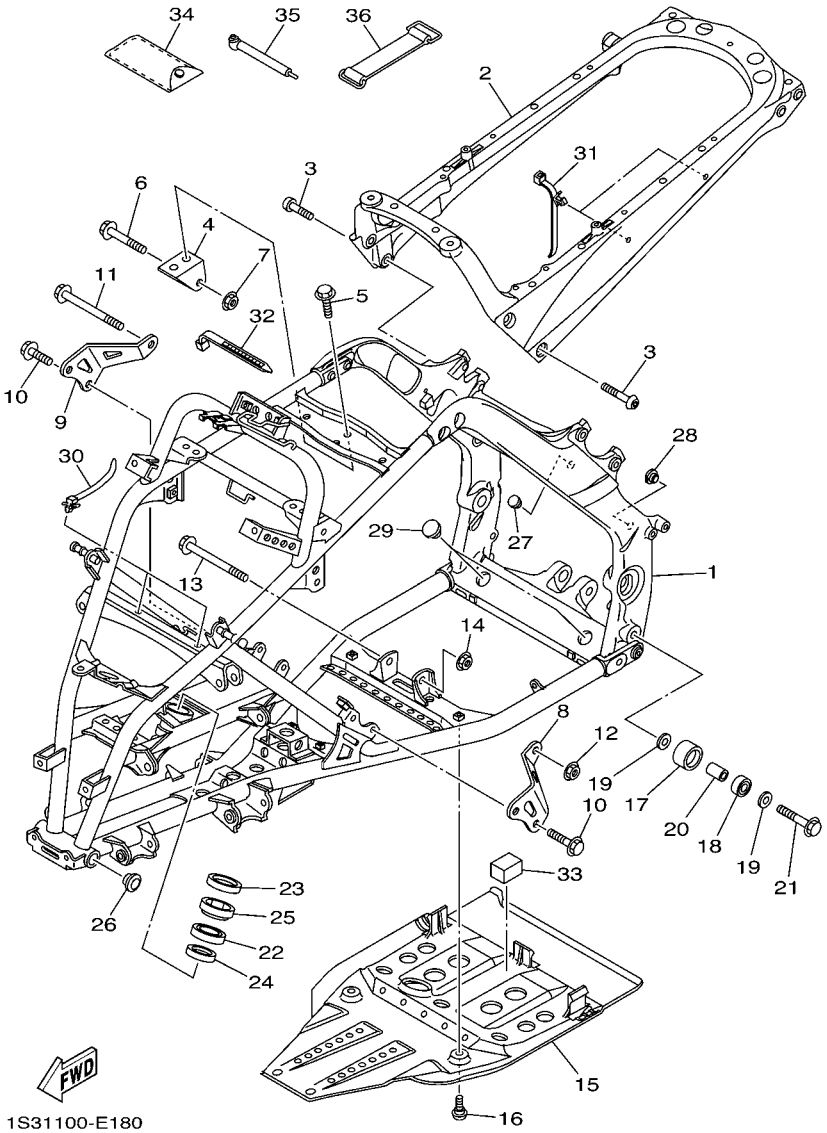

FIG. 18 FRAME

REF. NO.	PART NO.	DESCRIPTION	USA	CAN	EUR	OCE		REMARKS
28	90338–20183	PLUG	2	2	2	2		
29	90338–23004	PLUG	2	2	2	2		
30	90464–12036	CLAMP	2	2	2	2		
31	90464–20213	CLAMP	3	3	3	3		
32	90464–12045	CLAMP	1	1	1	1		
33	1S3–2140A–00	DAMPER, STOPPER	1	1	1	1		
34	5TG–28100–10	TOOL KIT	1	1	1	1		
35	1NV–2811A–01	GAUGE, AIR	1	1	1	1		
36	116–82131–00	BAND, BATTERY	1	1	1	1		

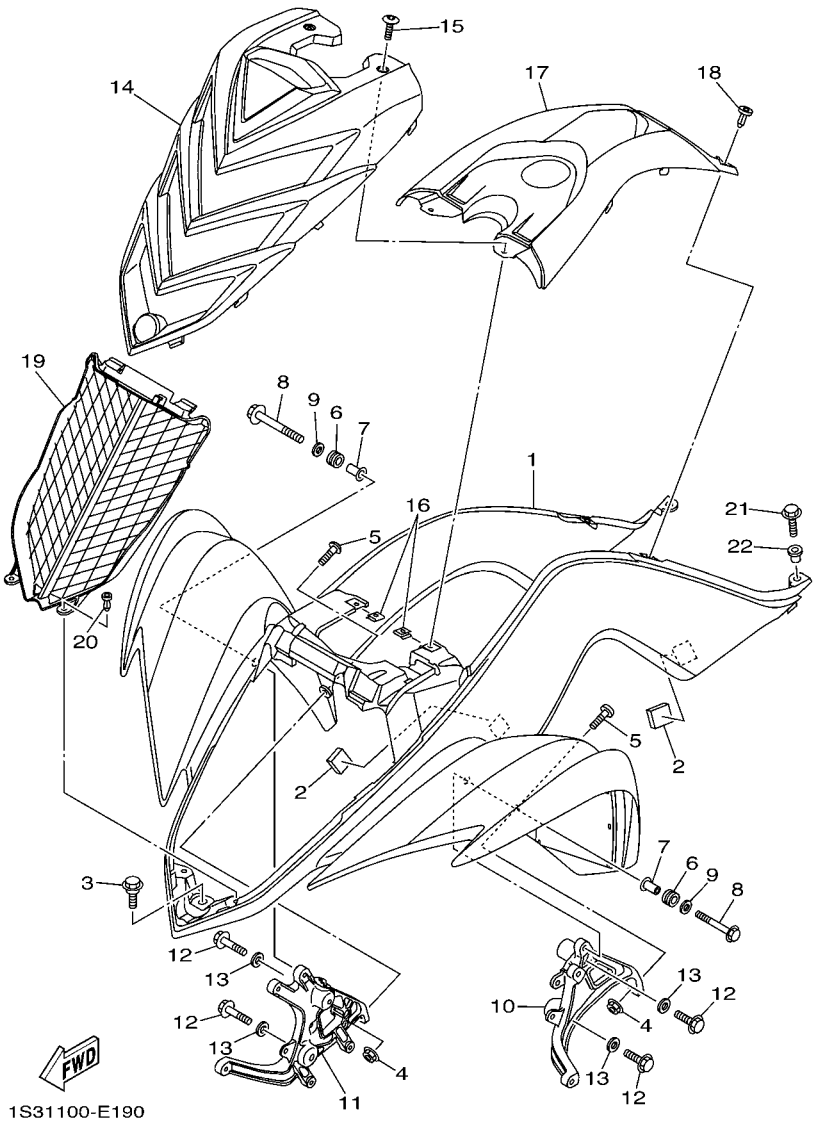

FIG. 19 FRONT FENDER

REF. NO.	PART NO.	DESCRIPTION	USA	CAN	EUR	OCE		REMARKS
1	1S3–W2151–40	FRONT FENDER COMP.	1					
	1S3–W215C–40	FRONT FENDER COMP.2		1				
	1S3–W215B–40	FRONT FENDER COMP. 2			1			
	1S3–W215E–40	FRONT FENDER COMP.				1		
2	1S3–21541–00	DAMPER 1	4	4	4	4		
3	90109–06172	BOLT	1	1	1	1		
4	95602–06200	NUT, SELF-LOCKING	2	2	2	2		
5	90110–06202	BOLT, HEXAGON SOCKET HEAD	2	2	2	2		
6	90480–14102	GROMMET	2	2	2	2		
7	90387–06136	COLLAR	2	2	2	2		
8	95812–06030	BOLT, FLANGE	2	2	2	2		
9	90201–06078	WASHER, PLATE	2	2	2	2		
10	1S3–21513–00	STAY, FENDER 1	1	1	1	1		
11	1S3–21514–00	STAY, FENDER 2	1	1	1	1		
12	95812–06014	BOLT, FLANGE	4	4	4	4		
13	90201–06089	WASHER, PLATE	4	4	4	4		
14	1S3–21556–F0	FENDER, FRONT 2	1	1	1	1		
15	90149–05299	SCREW	2	2	2	2		
16	90183–05008	NUT, SPRING	2	2	2	2		
17	1S3–2171A–D0	COVER, TOP	1	1	1	1		
18	90269–06002	RIVET	2	2	2	2		
19	1S3–12467–00	COVER, RADIATOR	1	1	1	1		
20	90269–06002	RIVET	2	2	2	2		
21	90105–06084	BOLT, FLANGE	2	2	2	2		
22	90387–06146	COLLAR	2	2	2	2		

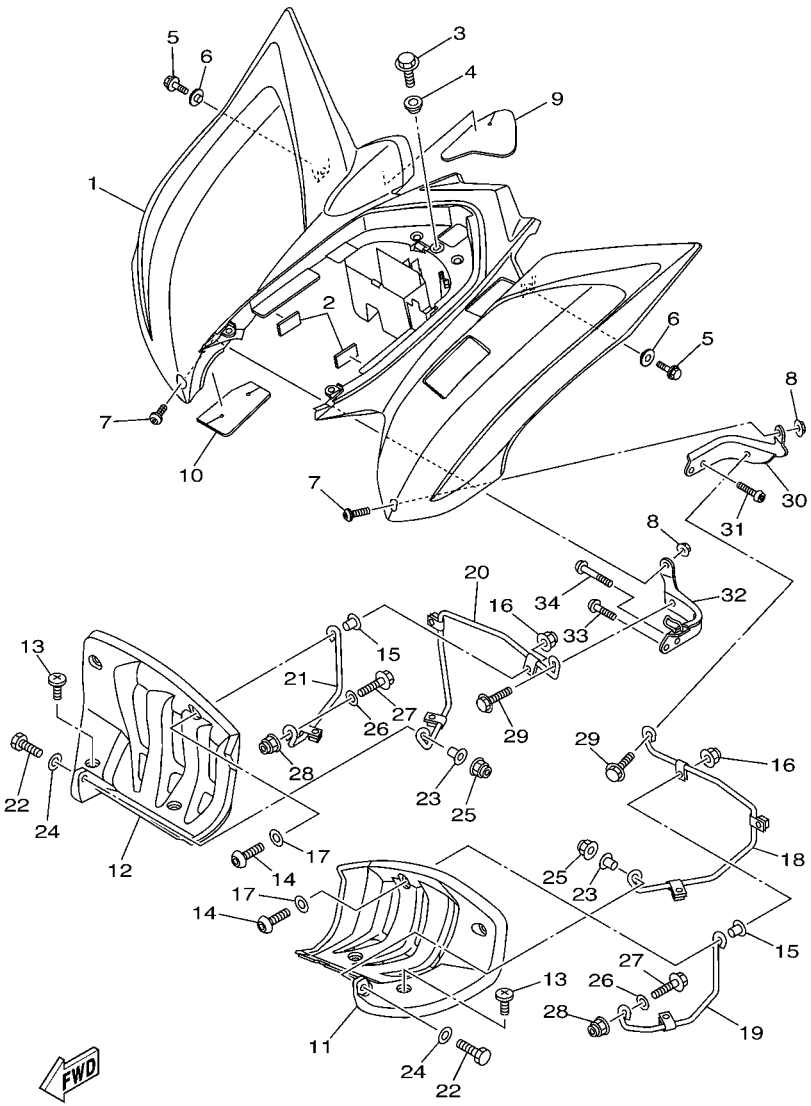

1S31100-E200

FIG. 20 REAR FENDER

REF. NO.	PART NO.	DESCRIPTION	USA	CAN	EUR	OCE		REMARKS
1	1S3–W2161–40	REAR FENDER COMP.	1			1		
	1S3–W216C–40	REAR FENDER COMP.2		1				
	1S3–W216B–40	REAR FENDER COMP.2			1			
2	1S3–2140A–00	DAMPER, STOPPER	2	2	2	2		
3	90105–06084	BOLT, FLANGE	1	1	1	1		
4	90387–06153	COLLAR	1	1	1	1		
5	95812–06014	BOLT, FLANGE	2	2	2	2		
6	90387–06153	COLLAR	2	2	2	2		
7	90111–06038	BOLT,HEX. SOCKET BUTTON	2	2	2	2		
8	95602–06200	NUT, SELF-LOCKING	2	2	2	2		
9	1S3–2163A–00	COVER, REAR FENDER 1	1	1	1	1		
10	1S3–2163E–00	COVER, REAR FENDER 2	1	1	1	1		
11	5TG–21621–00	FLAP	1	1	1	1		
12	5TG–21691–00	FLAP	1	1	1	1		
13	90154–05013	SCREW, BINDING	6	6	6	6		
14	92012–06025	BOLT, BUTTON HEAD	2	2	2	2		
15	90560–06201	SPACER	2	2	2	2		
16	95602–06200	NUT, SELF-LOCKING	2	2	2	2		
17	90201–06076	WASHER, PLATE	2	2	2	2		
18	1S3–2164F–10	STAY 1	1	1	1	1		
19	1S3–2164H–10	STAY 3	1	1	1	1		
20	5TG–2164G–20	STAY 2	1	1	1	1		
21	1S3–2164J–10	STAY 4	1	1	1	1		
22	97022–06025	BOLT	2	2	2	2		
23	90387–06204	COLLAR	2	2	2	2		
24	90201–06093	WASHER, PLATE	2	2	2	2		
25	95602–06200	NUT, SELF-LOCKING	2	2	2	2		

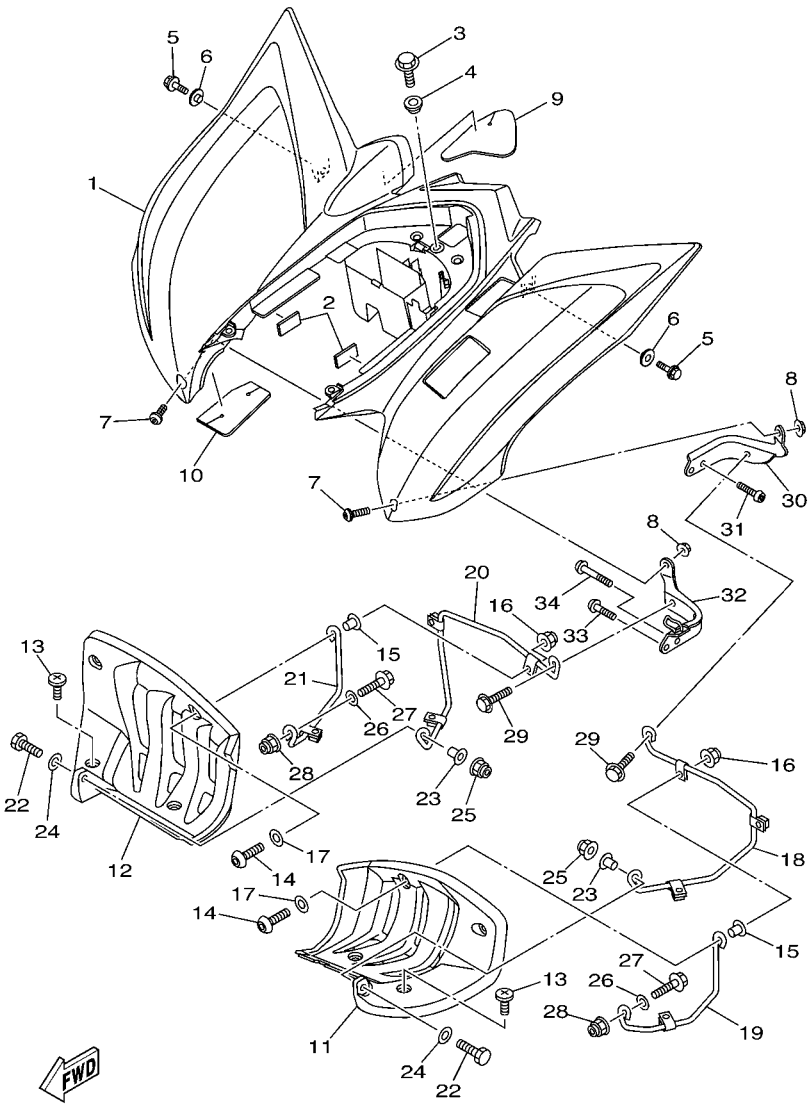

FIG. 20 REAR FENDER

REF. NO.	PART NO.	DESCRIPTION	USA	CAN	EUR	OCE		REMARKS
26	90201–08053	WASHER, PLATE	2	2	2	2		
27	95822–08020	BOLT, FLANGE	2	2	2	2		
28	95602–08200	NUT, SELF-LOCKING	2	2	2	2		
29	95822–08016	BOLT, FLANGE	2	2	2	2		
30	1S3–21643–10	STAY, REAR	1	1	1	1		
31	92012–08020	BOLT, BUTTON HEAD	2	2	2	2		
32	1S3–21644–10	STAY, REAR	1	1	1	1		
33	92012–08016	BOLT, BUTTON HEAD	1	1	1	1		
34	92012–08035	BOLT, BUTTON HEAD	1	1	1	1		

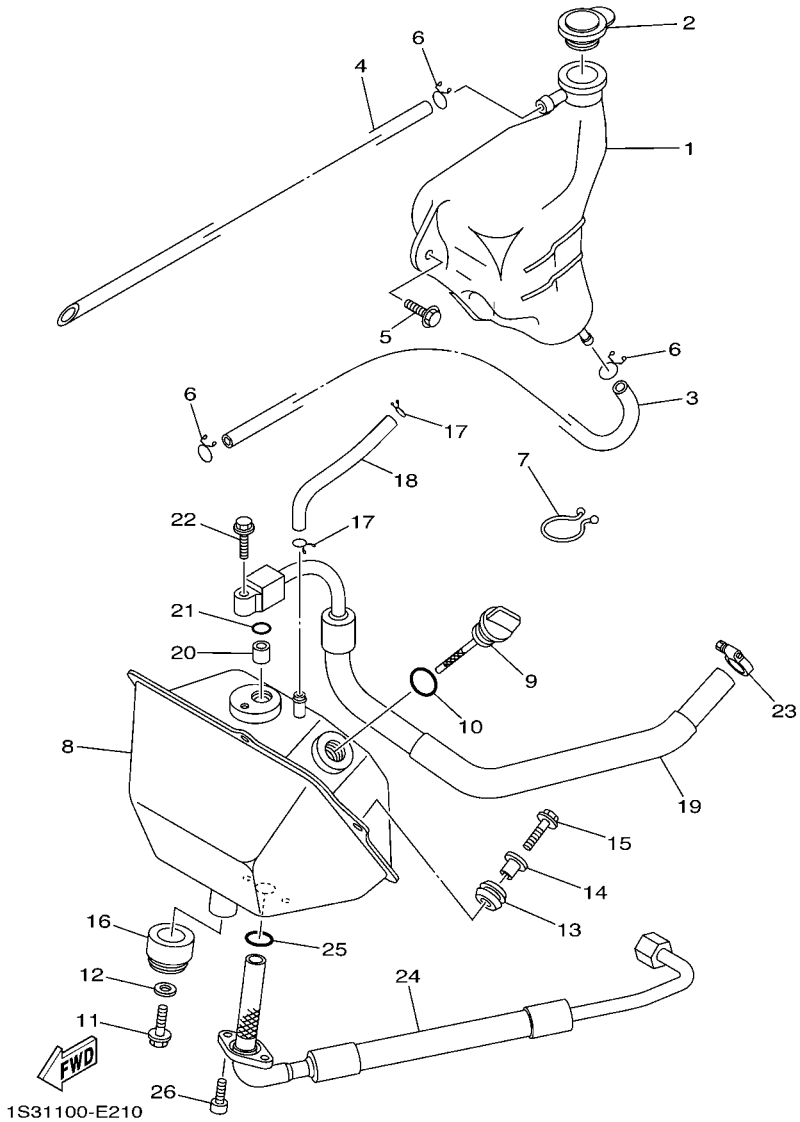

FIG. 21 OIL TANK

REF. NO.	PART NO.	DESCRIPTION	USA	CAN	EUR	OCE		REMARKS
1	5KM–21871–00	TANK, RECOVERY	1	1	1	1		
2	1S3–21875–00	CAP	1	1	1	1		
3	90445–09M30	HOSE (L630)	1	1	1	1		
4	90445–09777	HOSE (L300)	1	1	1	1		
5	90119–06152	BOLT, WITH WASHER	2	2	2	2		
6	90467–08003	CLIP	3	3	3	3		
7	90464–23041	CLAMP	2	2	2	2		
8	1S3–21750–00	OIL TANK ASSY	1	1	1	1		
9	5LP–21761–01	GAUGE, LEVEL	1	1	1	1		
10	93210–21190	O-RING	1	1	1	1		
11	95802–08016	BOLT, FLANGE	1	1	1	1		
12	90201–082A6	WASHER, PLATE	1	1	1	1		
13	90480–13459	GROMMET	2	2	2	2		
14	90387–06205	COLLAR	2	2	2	2		
15	95822–06020	BOLT, FLANGE	2	2	2	2		
16	90480–24004	GROMMET	1	1	1	1		
17	90467–10008	CLIP	2	2	2	2		
18	90445–11034	HOSE (L147)	1	1	1	1		
19	1S3–13465–00	HOSE, OIL 2	1	1	1	1		
20	99530–10114	PIN, DOWEL	1	1	1	1		
21	93210–10197	O-RING	1	1	1	1		
22	95022–06025	BOLT, FLANGE	1	1	1	1		
23	90450–22017	HOSE CLAMP ASSY	1	1	1	1		
24	1S3–13464–10	HOSE, OIL 1	1	1	1	1		
25	93210–16629	O-RING	1	1	1	1		
26	91312–06016	BOLT	2	2	2	2		

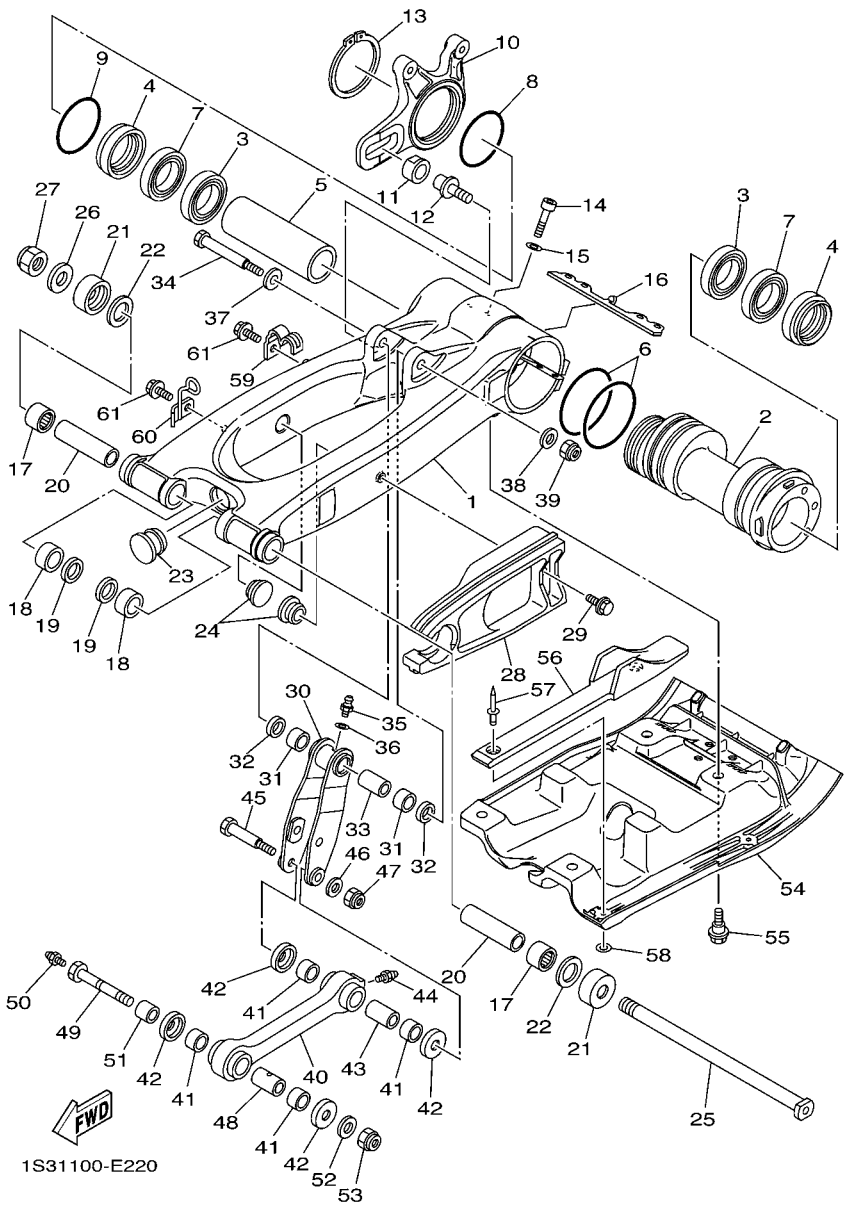

FIG. 22 REAR ARM

REF. NO.	PART NO.	DESCRIPTION	USA	CAN	EUR	OCE		REMARKS
1	1S3–22110–00	REAR ARM COMP.	1	1	1	1		
2	1S3–25311–00	HUB, REAR	1	1	1	1		
3	93306–90804	BEARING	2	2	2	2		
4	93106–46003	OIL SEAL	2	2	2	2		
5	1S3–25317–00	SPACER, BEARING	1	1	1	1		
6	1S3–23147–01	O-RING	2	2	2	2		
7	93306–90805	BEARING	2	2	2	2		
8	93210–66001	O-RING	1	1	1	1		
9	93210–71001	O-RING	1	1	1	1		
10	1S3–25721–00	BRACKET, CALIPER	1	1	1	1		
11	90387–16014	COLLAR	1	1	1	1		
12	90110–12001	BOLT, HEXAGON SOCKET HEAD	1	1	1	1		
13	93410–67085	CIRCLIP	1	1	1	1		
14	91314–08040	BOLT	4	4	4	4		
15	92903–08600	WASHER, PLATE	4	4	4	4		
16	1S3–22475–00	SEAL, DUST	1	1	1	1		
17	93317–22237	BEARING	2	2	2	2		
18	90380–22111	BUSH, SOLID	2	2	2	2		
19	93106–22019	OIL SEAL (DC 22-28-8)	2	2	2	2		
20	1S3–22184–00	BUSH	2	2	2	2		
21	4X7–22129–00	COVER, THRUST 2	2	2	2	2		
22	3YF–22149–00	WASHER	2	2	2	2		
23	1S3–22417–00	PLUG	1	1	1	1		
24	90338–23004	PLUG	2	2	2	2		
25	1S3–22141–00	SHAFT, PIVOT	1	1	1	1		
26	90201–16018	WASHER, PLATE	1	1	1	1		
27	90185–16002	NUT, SELF-LOCKING	1	1	1	1		

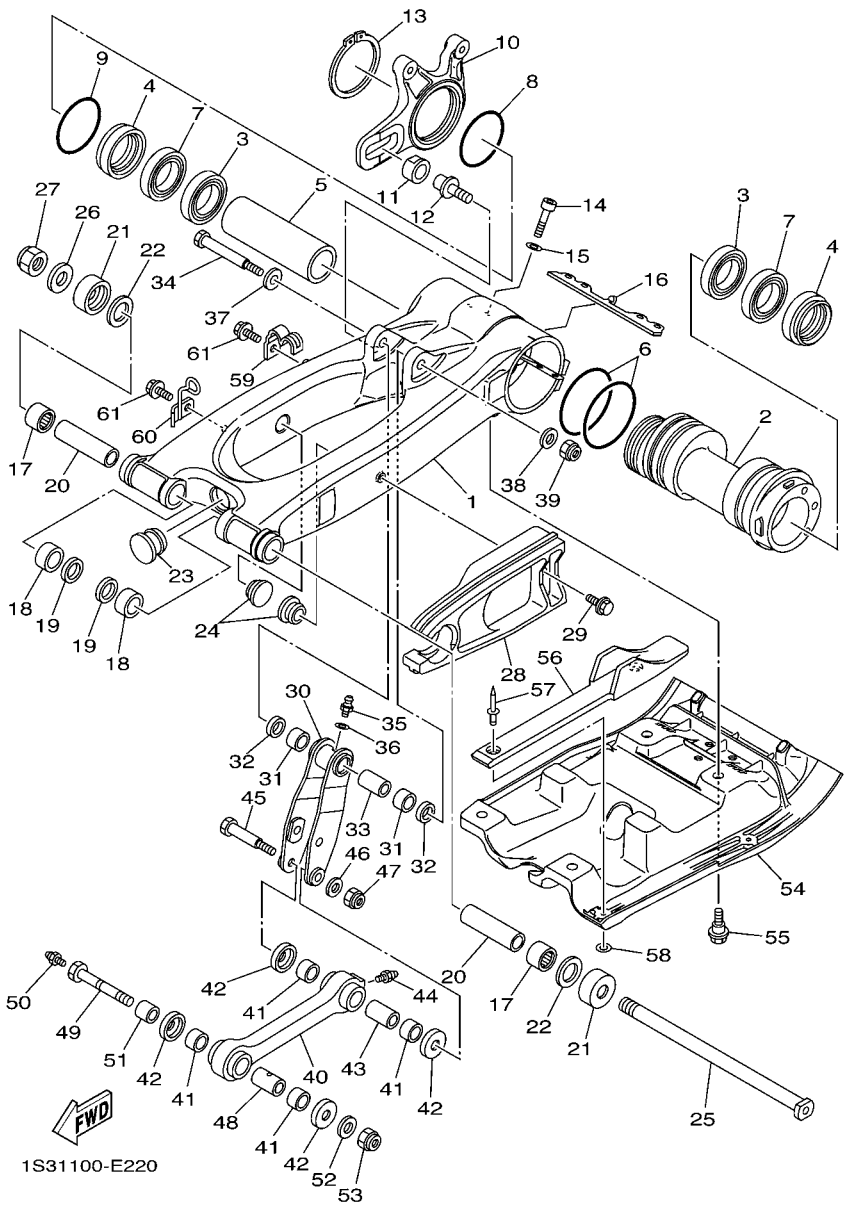

FIG. 22 REAR ARM

REF. NO.	PART NO.	DESCRIPTION	USA	CAN	EUR	OCE		REMARKS
28	1S3–22151–00	SEAL, GUARD	1	1	1	1		
29	90109–06172	BOLT	1	1	1	1		
30	1S3–2217A–00	ARM, RELAY	1	1	1	1		
31	90383–20033	BUSH, FORMED	2	2	2	2		
32	93109–20076	OIL SEAL	2	2	2	2		
33	90387–12021	COLLAR	1	1	1	1		
34	90109–10018	BOLT	1	1	1	1		
35	93700–06004	NIPPLE, GREASE	1	1	1	1		
36	90201–063F3	WASHER, PLATE	1	1	1	1		
37	90201–12030	WASHER, PLATE	1	1	1	1		
38	90201–10034	WASHER, PLATE	1	1	1	1		
39	90185–10012	NUT, SELF-LOCKING	1	1	1	1		
40	1S3–2217F–00	ROD, CONNECTING 1	1	1	1	1		
41	90383–20032	BUSH, FORMED	4	4	4	4		
42	5YT–22129–00	COVER, THRUST 2	4	4	4	4		
43	90387–125K2	COLLAR	1	1	1	1		
44	93700–06004	NIPPLE, GREASE	1	1	1	1		
45	90109–10020	BOLT	1	1	1	1		
46	90201–10035	WASHER, PLATE	1	1	1	1		
47	90185–10012	NUT, SELF-LOCKING	1	1	1	1		
48	90387–12010	COLLAR	1	1	1	1		
49	90109–12009	BOLT	1	1	1	1		
50	93700–06004	NIPPLE, GREASE	1	1	1	1		
51	90387–12028	COLLAR	1	1	1	1		
52	90201–12032	WASHER, PLATE	1	1	1	1		
53	90185–12007	NUT, SELF-LOCKING	1	1	1	1		
54	1S3–2219X–00	COVER	1	1	1	1		

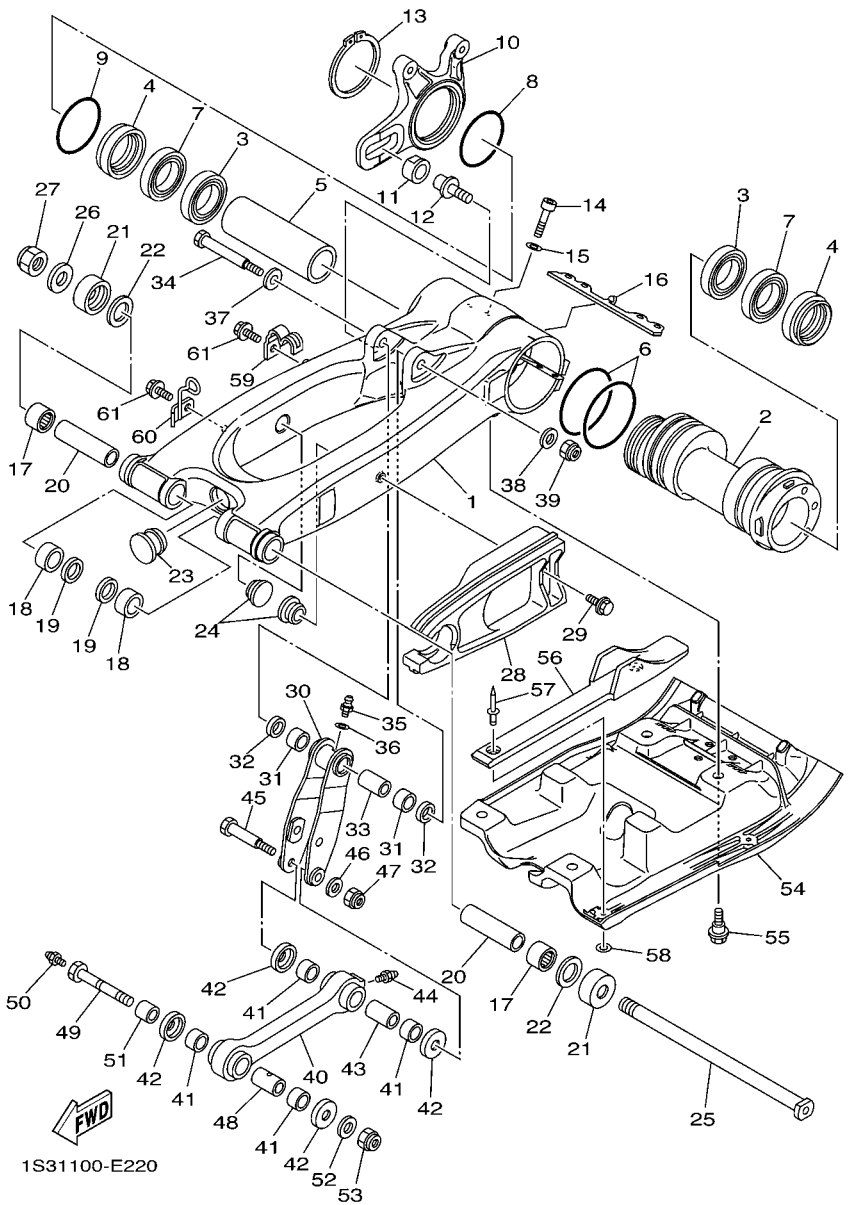

FIG. 22 REAR ARM

REF. NO.	PART NO.	DESCRIPTION	USA	CAN	EUR	OCE		REMARKS
55	90109–06199	BOLT	4	4	4	4		
56	1S3–22153–00	GUARD, CHAIN	1	1	1	1		
57	90267–47187	RIVET, BLIND	2	2	2	2		
58	90201–04027	WASHER, PLATE	2	2	2	2		
59	1S3–25886–00	HOLDER, BRAKE HOSE	1	1	1	1		
60	1S3–23317–00	HOLDER, CABLE	1	1	1	1		
61	95022–06012	BOLT, FLANGE	2	2	2	2		

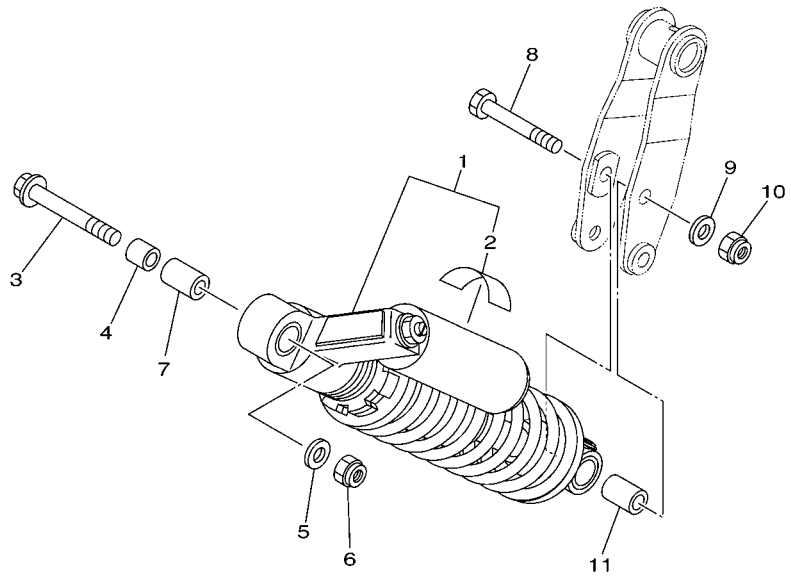

1S31100-E230

FIG. 23 REAR SUSPENSION

REF. NO.	PART NO.	DESCRIPTION	USA	CAN	EUR	OCE		REMARKS
1	1S3–22210–C0	SHOCK ABSORBER ASSY, REAR	1					
	1S3–22210–D0	SHOCK ABSORBER ASSY, REAR		1				
	1S3–22210–E0	SHOCK ABSORBER ASSY, REAR			1	1		
2	4AA–22259–80	.LABEL, WARNING	1					
	4AA–22259–70	.LABEL, WARNING		1				
	4AA–22259–40	.LABEL, WARNING			1	1		
3	90105–12038	BOLT, FLANGE	1	1	1	1		
4	90387–12028	COLLAR	1	1	1	1		
5	90201–12032	WASHER, PLATE	1	1	1	1		
6	90185–12007	NUT, SELF-LOCKING	1	1	1	1		
7	90387–12020	COLLAR	1	1	1	1		
8	90109–10019	BOLT	1	1	1	1		
9	90201–10036	WASHER, PLATE	1	1	1	1		
10	90185–10012	NUT, SELF-LOCKING	1	1	1	1		
11	90387–127W0	COLLAR	1	1	1	1		

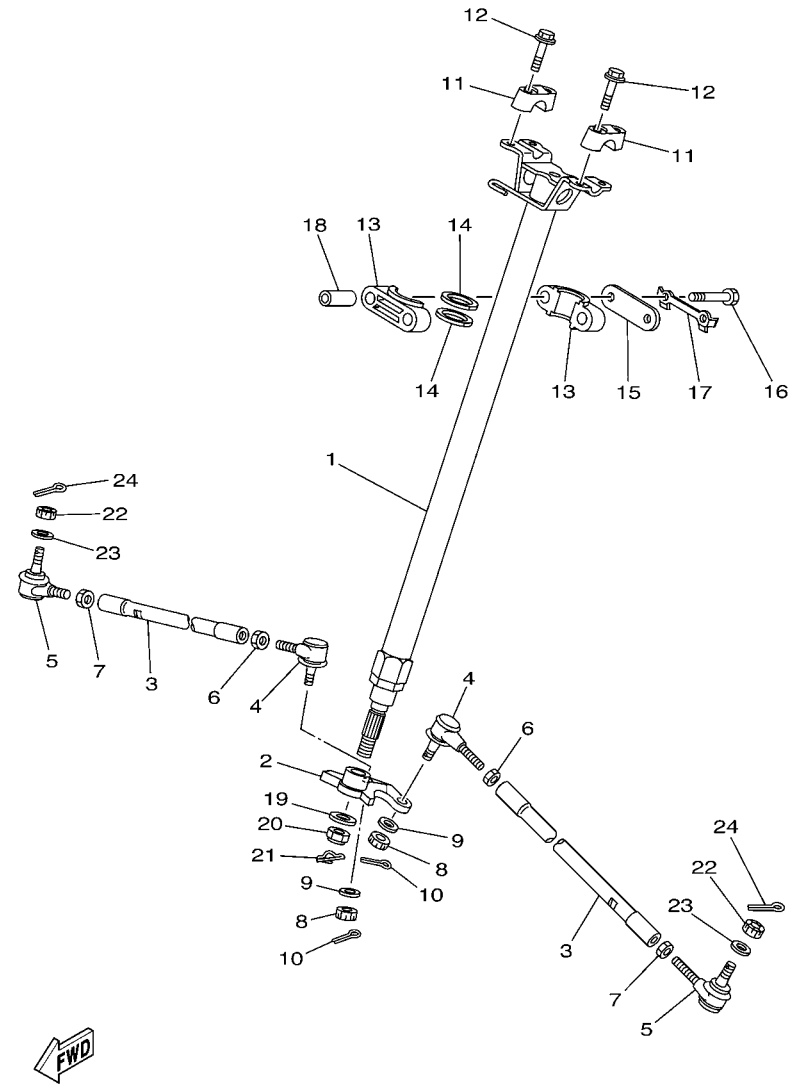

1S31100-E240

FIG. 24 STEERING

REF. NO.	PART NO.	DESCRIPTION	USA	CAN	EUR	OCE		REMARKS
1	1S3–23813–10	COLUMN, STEERING 2	1	1	1	1		
2	5TG–23816–10	ARM, PITMAN	1	1	1	1		
3	1S3–23831–20	ROD, TIE	2	2	2	2		
4	1S3–23841–20	JOINT, UNIVERSAL 1	2	2	2	2		
5	1S3–23845–20	JOINT, UNIVERSAL 2	2	2	2	2		
6	90170–12055	NUT	2	2	2	2		
7	90170–12054	NUT	2	2	2	2		(RH. THREAD)
8	90171–10001	NUT, CASTLE	2	2	2	2		
9	90209–10229	WASHER	2	2	2	2		
10	91402–20020	PIN, COTTER	2	2	2	2		
11	8K1–23814–00	HOLDER, HANDLE	2	2	2	2		
12	95822–08030	BOLT, FLANGE	4	4	4	4		
13	1UY–23812–00	PLANE BEARING, STEERING	2	2	2	2		
14	93112–31011	OIL SEAL	2	2	2	2		
15	1UY–23868–01	BRACKET, STEERING LOWER	1	1	1	1		
16	97022–08060	BOLT	2	2	2	2		
17	1UY–23894–01	WASHER, LOCK 1	1	1	1	1		
18	90387–090R0	COLLAR	2	2	2	2		
19	90201–14021	WASHER, PLATE	1	1	1	1		
20	90185–14009	NUT, SELF-LOCKING	1	1	1	1		
21	90468–16191	CLIP	1	1	1	1		
22	90171–10001	NUT, CASTLE	2	2	2	2		
23	90209–10229	WASHER	2	2	2	2		
24	91402–20020	PIN, COTTER	2	2	2	2		

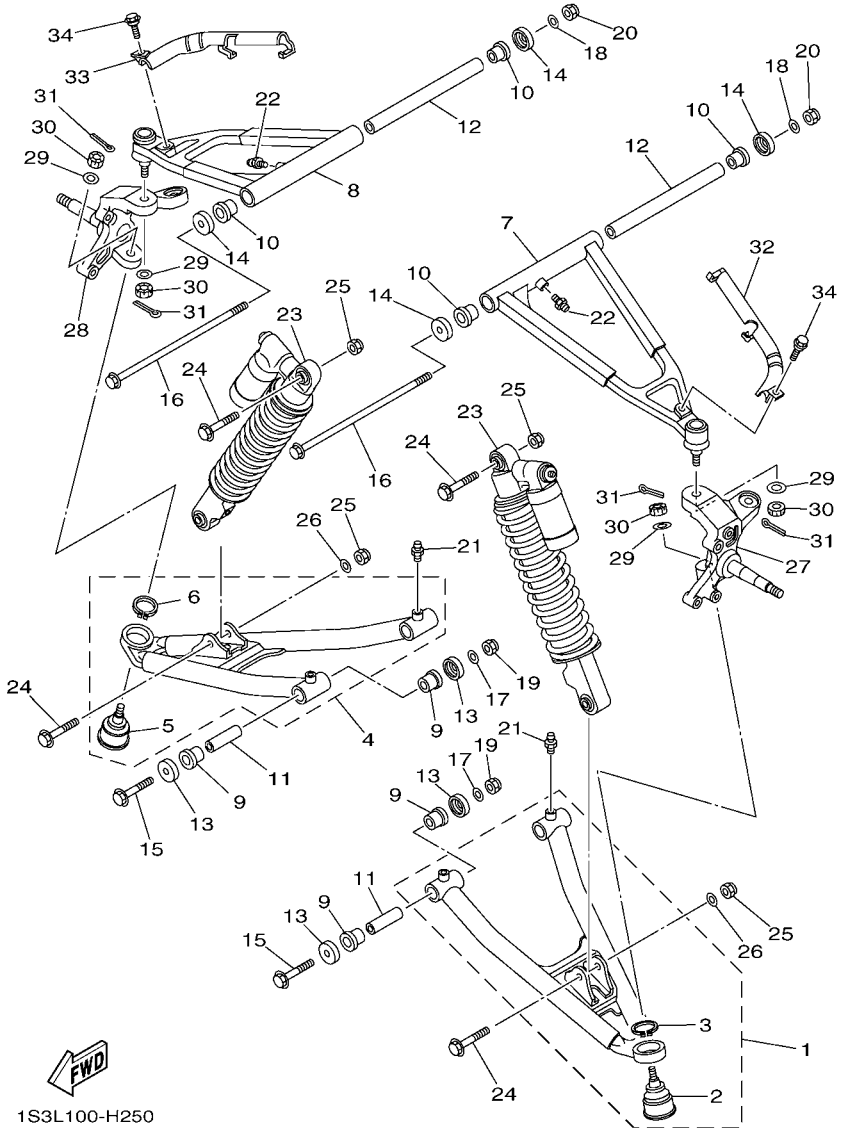

FIG. 25 FRONT SUSPENSION & WHEEL

REF. NO.	PART NO.	DESCRIPTION	USA	CAN	EUR	OCE		REMARKS
1	5TG–23570–30	FRONT LOWER ARM COMP. (LEFT)	1	1	1	1		
2	5LP–23579–00	.BALL JOINT 2	1	1	1	1		
3	99009–30400	.CIRCLIP	1	1	1	1		
4	5TG–23580–30	FRONT LOWER ARM COMP. (RIGHT)	1	1	1	1		
5	5LP–23579–00	.BALL JOINT 2	1	1	1	1		
6	99009–30400	.CIRCLIP	1	1	1	1		
7	5TG–23540–30	FRONT UPPER ARM COMP. (LEFT)	1	1	1	1		
8	5TG–23550–30	FRONT UPPER ARM COMP. (RIGHT)	1	1	1	1		
9	90381–15088	BUSH, SOLID	8	8	8	8		
10	90381–15088	BUSH, SOLID	4	4	4	4		
11	90387–101R3	COLLAR	4	4	4	4		
12	90387–100Y6	COLLAR	2	2	2	2		
13	5YT–23517–00	COVER, THRUST 1	8	8	8	8		
14	5YT–23517–00	COVER, THRUST 1	4	4	4	4		
15	90105–10135	BOLT, FLANGE	4	4	4	4		
16	90105–10132	BOLT, FLANGE	2	2	2	2		
17	90201–10037	WASHER, PLATE	4	4	4	4		
18	90201–10037	WASHER, PLATE	2	2	2	2		
19	90185–10012	NUT, SELF-LOCKING	4	4	4	4		
20	90185–10012	NUT, SELF-LOCKING	2	2	2	2		
21	93700–06004	NIPPLE, GREASE	4	4	4	4		
22	93700–06004	NIPPLE, GREASE	2	2	2	2		
23	1S3–23350–A0	SHOCK ABSORBER ASSY	2					
	1S3–23350–B0	SHOCK ABSORBER ASSY		2				
	1S3–23350–C0	SHOCK ABSORBER ASSY			2	2		
24	90105–10131	BOLT, FLANGE	4	4	4	4		
25	90185–10012	NUT, SELF-LOCKING	4	4	4	4		

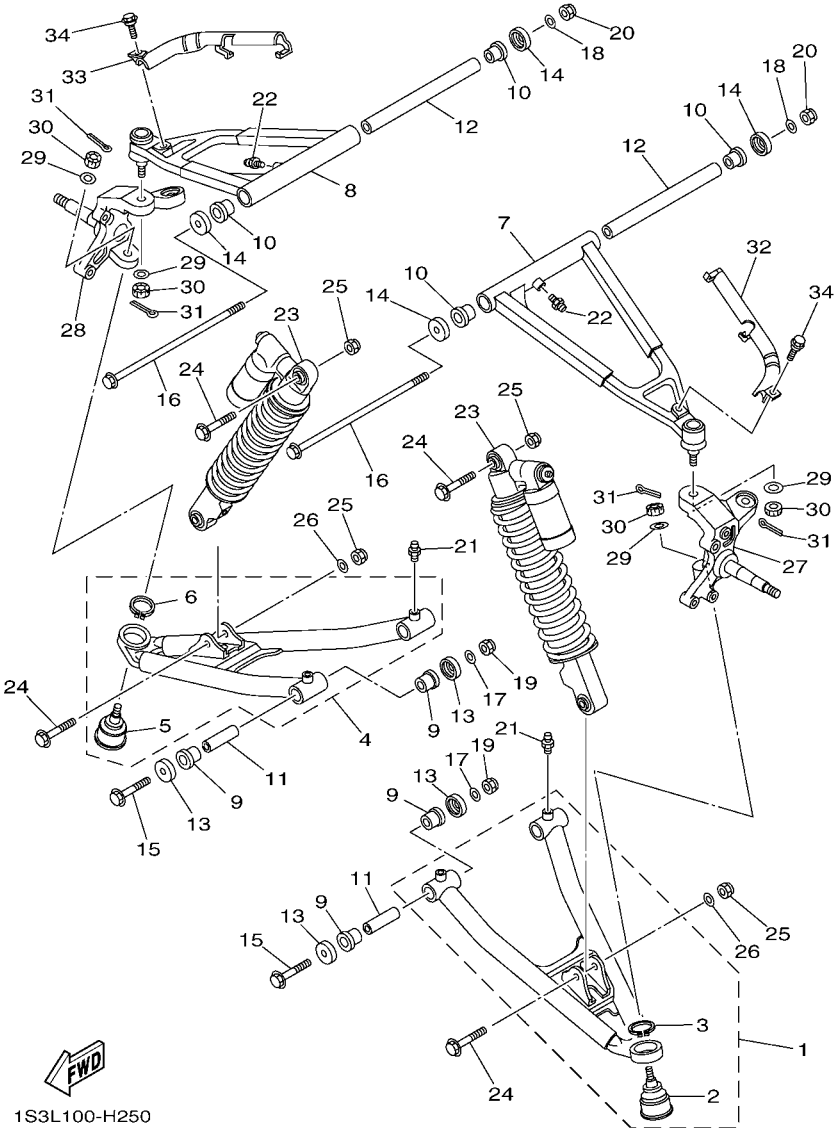

FIG. 25 FRONT SUSPENSION & WHEEL

REF. NO.	PART NO.	DESCRIPTION	USA	CAN	EUR	OCE		REMARKS
26	90201–10035	WASHER, PLATE	2	2	2	2		
27	1S3–23501–00	STEERING KNUCKLE ASSY (LEFT)	1	1	1	1		
28	1S3–23502–00	STEERING KNUCKLE ASSY (RIGHT)	1	1	1	1		
29	90209–10229	WASHER	4	4	4	4		
30	90171–10001	NUT, CASTLE	4	4	4	4		
31	91402–20020	PIN, COTTER	4	4	4	4		
32	5TG–25875–00	HOLDER, BRAKE HOSE 1	1	1	1	1		
33	5TG–25876–00	HOLDER, BRAKE HOSE 2	1	1	1	1		
34	90109–067F4	BOLT	2	2	2	2		

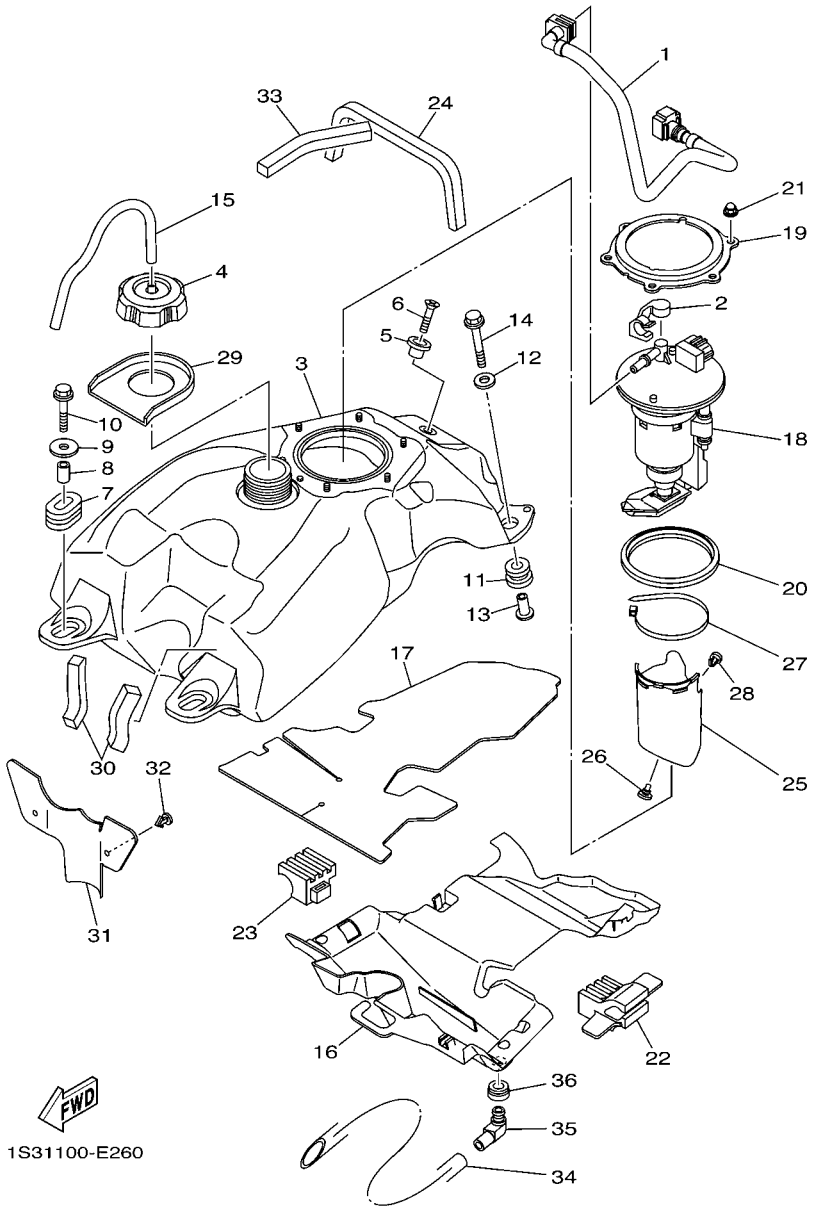

FIG. 26 FUEL TANK

REF. NO.	PART NO.	DESCRIPTION	USA	CAN	EUR	OCE		REMARKS
1	1S3–13971–10	PIPE, FUEL 1	1	1				
	1S3–13971–00	PIPE, FUEL 1			1	1		
2	90464–14004	CLAMP	1	1	1	1		
3	1S3–24110–20	FUEL TANK COMP.	1	1				
	1S3–24110–00	FUEL TANK COMP.			1	1		
4	2FJ–24610–00	CAP ASSY	1	1	1	1		
5	4EW–2412F–00	BRACKET, SEAT	1	1	1	1		
6	98702–06025	SCREW, FLAT HEAD	1	1	1	1		
7	90480–01017	GROMMET	2	2	2	2		
8	90387–06M17	COLLAR	2	2	2	2		
9	90201–06090	WASHER, PLATE	2	2	2	2		
10	95802–06035	BOLT, FLANGE	2	2	2	2		
11	90480–18005	GROMMET	2	2	2	2		
12	90201–06033	WASHER, PLATE	2	2	2	2		
13	90387–06098	COLLAR	2	2	2	2		
14	95802–06035	BOLT, FLANGE	2	2	2	2		
15	90445–083J4	HOSE (L340)	1	1	1	1		
16	1S3–2414H–00	DAMPER, PLATE 1	1	1	1	1		
17	1S3–2416F–00	INSULATOR, FUEL TANK 1	1	1	1	1		
18	1S3–13907–02	FUEL PUMP COMP.	1	1	1	1		
19	1S3–24491–10	BRACKET, FUEL PUMP	1	1	1	1		
20	1S3–24486–00	O-RING	1	1	1	1		
21	95302–06800	NUT, CROWN	6	6	6	6		
22	1S3–24278–00	STOPPER 1	1	1	1	1		
23	1S3–24279–00	STOPPER 2	1	1	1	1		
24	1S3–24181–00	DAMPER, LOCATING 1	1	1	1	1		
25	1S3–24452–00	COVER	1	1	1	1		

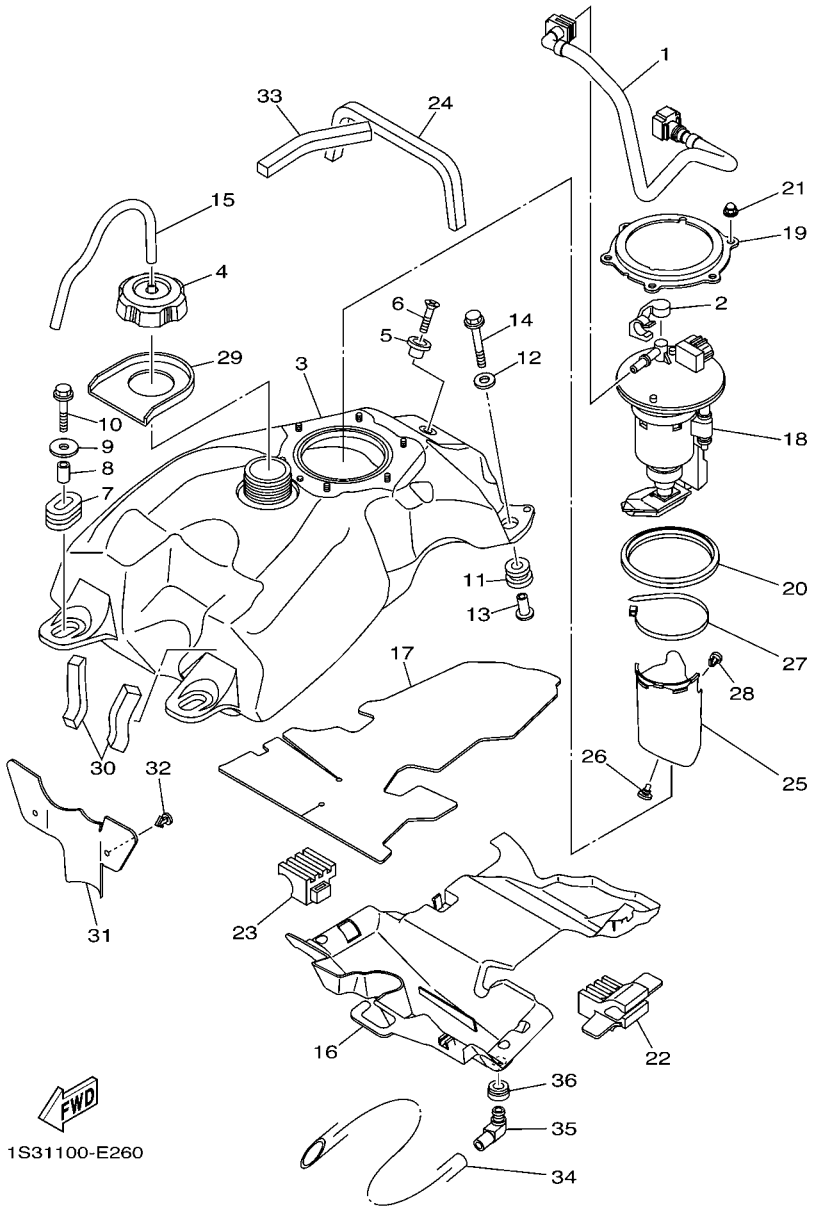

FIG. 26 FUEL TANK

REF. NO.	PART NO.	DESCRIPTION	USA	CAN	EUR	OCE		REMARKS
26	90338–05008	PLUG	2	2	2	2		
27	90464–66001	CLAMP	1	1	1	1		
28	90269–07011	RIVET	1	1	1	1		
29	1S3–2414J–00	DAMPER, PLATE 2	1	1	1	1		
30	1S3–24182–00	DAMPER, LOCATING 2	2	2	2	2		
31	1S3–2413X–00	PLATE	1	1	1	1		
32	90269–05055	RIVET	2	2	2	2		
33	1S3–24183–00	DAMPER, LOCATING 3	1	1	1	1		
34	90445–16007	HOSE (L400)	1	1	1	1		
35	31A–14419–00	PIPE	1	1	1	1		
36	31A–14435–00	GROMMET	1	1	1	1		

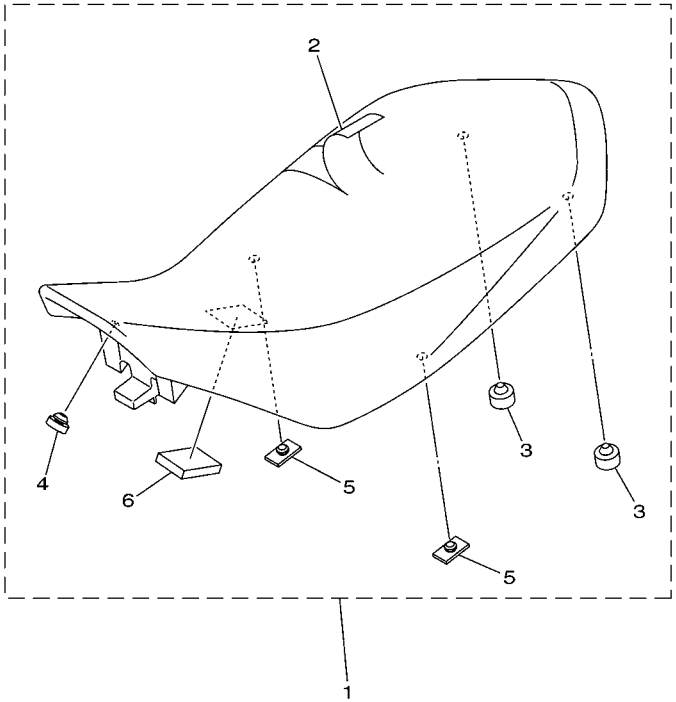

1S31100-E270

FIG. 27 SEAT

REF. NO.	PART NO.	DESCRIPTION	USA	CAN	EUR	OCE		REMARKS
1	1S3–24710–50	SINGLE SEAT ASSY	1	1	1	1		
2	1S3–24731–50	.COVER, SEAT	1	1	1	1		
3	371–27114–00	.STOPPER, MAIN STAND	2	2	2	2		
4	22W–24741–00	.PAD, SEAT	1	1	1	1		
5	509–24724–00	.DAMPER, SEAT	2	2	2	2		
6	1S3–24723–00	.DAMPER, SEAT	1	1	1	1		

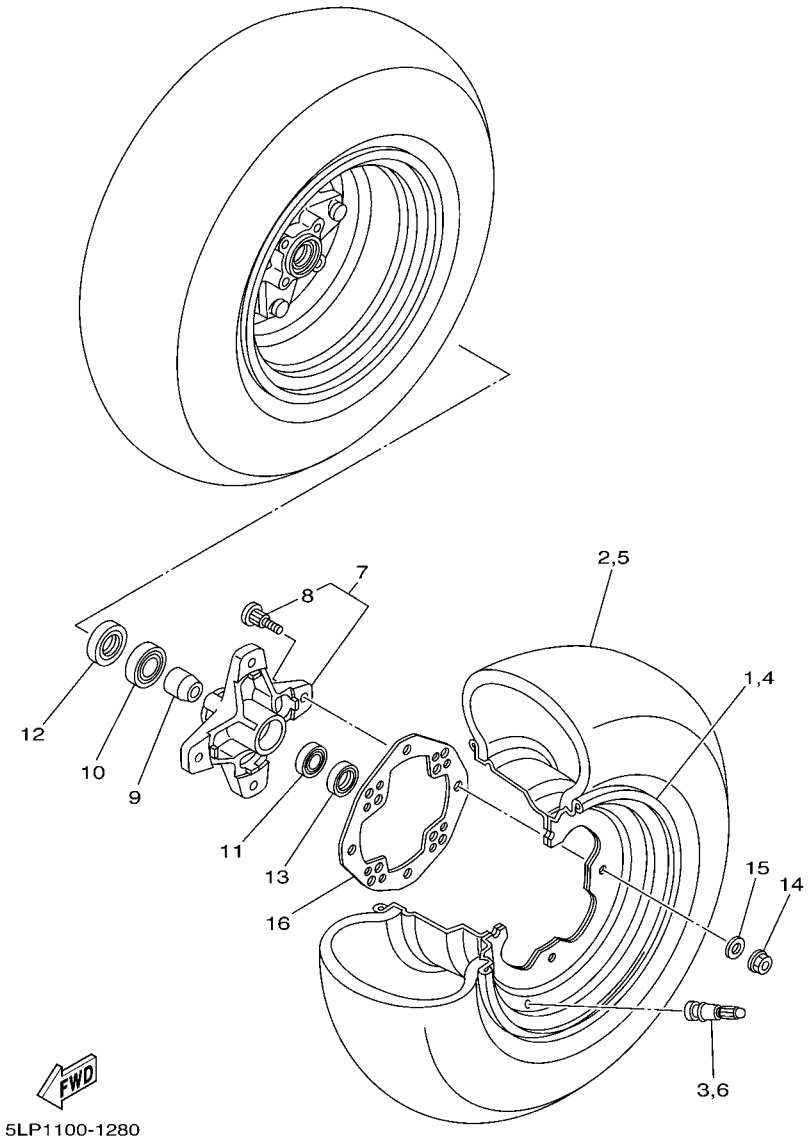

FIG. 28 FRONT WHEEL

REF. NO.	PART NO.	DESCRIPTION	USA	CAN	EUR	OCE		REMARKS
1	5LP–25180–20	WHEEL COMP.	1	1	1	1		
2	94107–10015	TIRE (AT21X7R10 KT341 T/L N)	1	1	1	1		DUNLOP
3	93900–00030	VALVE, RIM (TR412)	1	1	1	1		TAIHEIYO
4	5LP–25180–20	WHEEL COMP.	1	1	1	1		
5	94107–10015	TIRE (AT21X7R10 KT341 T/L N)	1	1	1	1		DUNLOP
6	93900–00030	VALVE, RIM (TR412)	1	1	1	1		TAIHEIYO
7	1S3–25111–00	HUB, FRONT	2	2	2	2		
8	90114–10006	.BOLT, SERRATION	4	4	4	4		
9	5LP–25117–00	SPACER, BEARING	2	2	2	2		
10	93306–00446	BEARING	2	2	2	2		
11	93306–20231	BEARING	2	2	2	2		
12	93105–26026	OIL SEAL	2	2	2	2		
13	93102–22216	OIL SEAL	2	2	2	2		
14	95702–10500	NUT, WITH WASHER	8	8	8	8		
15	92902–10200	WASHER	8	8	8	8		
16	1S3–25127–00	COVER, PLATE	2	2	2	2		

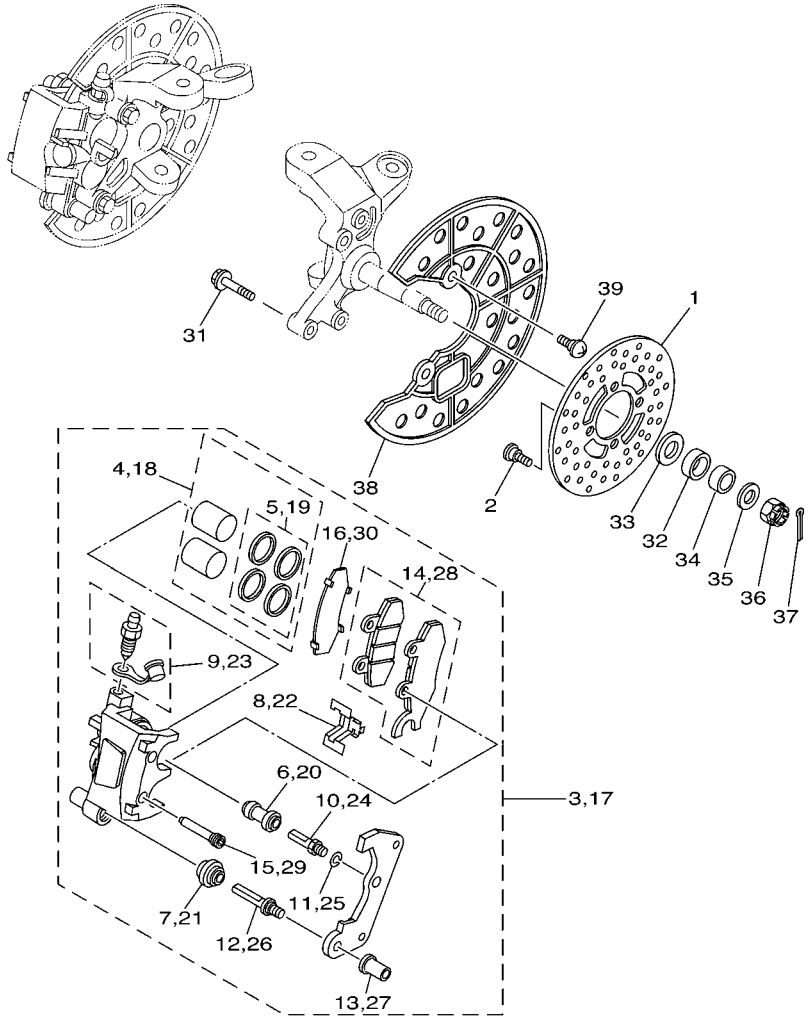

1S31100-E290

FIG. 29 FRONT BRAKE CALIPER

REF. NO.	PART NO.	DESCRIPTION	USA	CAN	EUR	OCE		REMARKS
1	3GD–2582T–10	DISC, BRAKE (LEFT)	2	2	2	2		
2	90109–08082	BOLT	8	8	8	8		
3	1S3–2580T–01	CALIPER ASSY (LEFT)	1	1	1	1		
4	5TG–W0057–00	.PISTON ASSY, CALIPER	1	1	1	1		
5	3LC–W0047–50	..CALIPER SEAL KIT	1	1	1	1		
6	1UY–25937–51	.BOOT 2	1	1	1	1		
7	3JD–25917–00	.BOOT, CALIPER	1	1	1	1		
8	3JD–25919–00	.SUPPORT, PAD	1	1	1	1		
9	1UY–W0048–50	.BLEED SCREW KIT	1	1	1	1		
10	1UY–25926–51	.BOLT	1	1	1	1		
11	1UY–25938–51	.WASHER, SPRING	1	1	1	1		
12	3JD–25926–00	.BOLT	1	1	1	1		
13	3JD–25961–00	.NUT	1	1	1	1		
14	1S3–W0045–00	.BRAKE PAD KIT	1	1	1	1		LH
15	5TG–25924–00	.PIN, PAD	2	2	2	2		
16	1S3–25828–00	.SHIM, CALIPER	1	1	1	1		
17	1S3–2580U–01	CALIPER ASSY (RIGHT)	1	1	1	1		
18	5TG–W0057–00	.PISTON ASSY, CALIPER	1	1	1	1		
19	3LC–W0047–50	..CALIPER SEAL KIT	1	1	1	1		
20	1UY–25937–51	.BOOT 2	1	1	1	1		
21	3JD–25917–00	.BOOT, CALIPER	1	1	1	1		
22	3JD–25919–00	.SUPPORT, PAD	1	1	1	1		
23	1UY–W0048–50	.BLEED SCREW KIT	1	1	1	1		
24	1UY–25926–51	.BOLT	1	1	1	1		
25	1UY–25938–51	.WASHER, SPRING	1	1	1	1		
26	3JD–25926–00	.BOLT	1	1	1	1		
27	3JD–25961–00	.NUT	1	1	1	1		

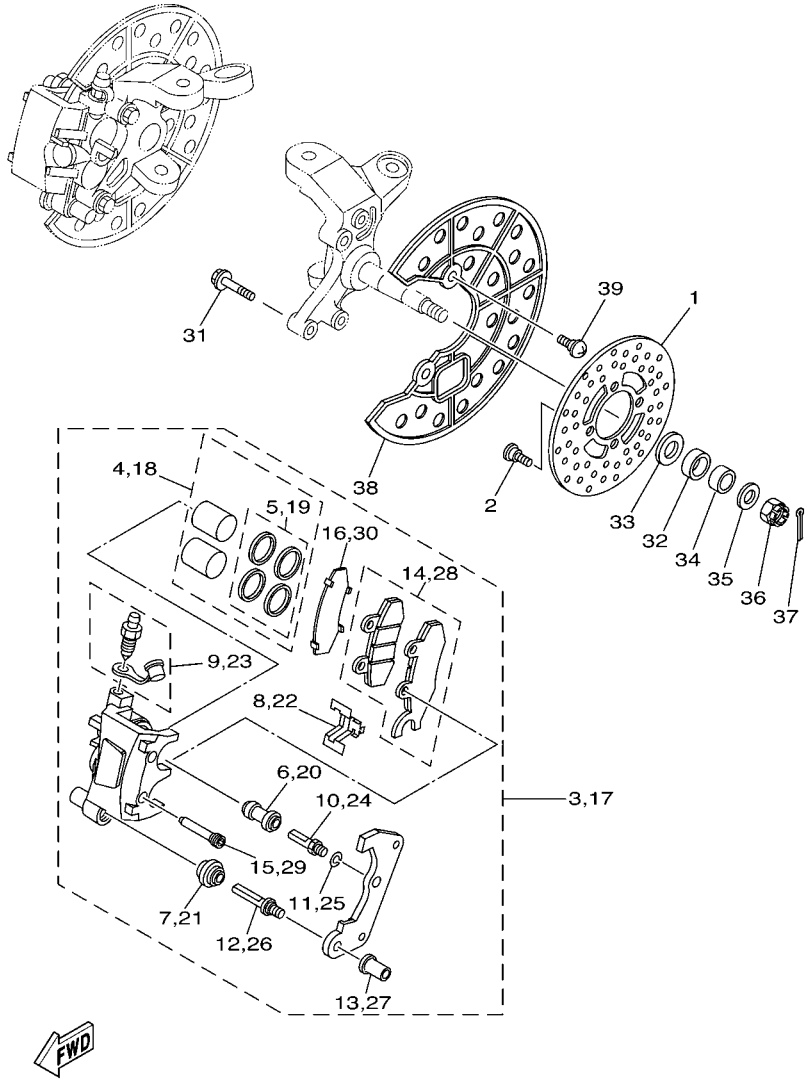

1S31100-E290

FIG. 29 FRONT BRAKE CALIPER

REF. NO.	PART NO.	DESCRIPTION	USA	CAN	EUR	OCE		REMARKS
28	1S3–W0045–10	.BRAKE PAD KIT	1	1	1	1		RH
29	5TG–25924–00	.PIN, PAD	2	2	2	2		
30	1S3–25828–00	.SHIM, CALIPER	1	1	1	1		
31	90105–08184	BOLT, FLANGE	4	4	4	4		
32	90387–20005	COLLAR	2	2	2	2		
33	90201–20022	WASHER, PLATE	2	2	2	2		
34	90387–150R1	COLLAR	2	2	2	2		
35	90201–14586	WASHER, PLATE	2	2	2	2		
36	90171–14002	NUT, CASTLE	2	2	2	2		
37	91402–30025	PIN, COTTER	2	2	2	2		
38	5TG–2514A–00	RING, WHEEL 1	2	2	2	2		
39	90154–06014	SCREW, BINDING	4	4	4	4		

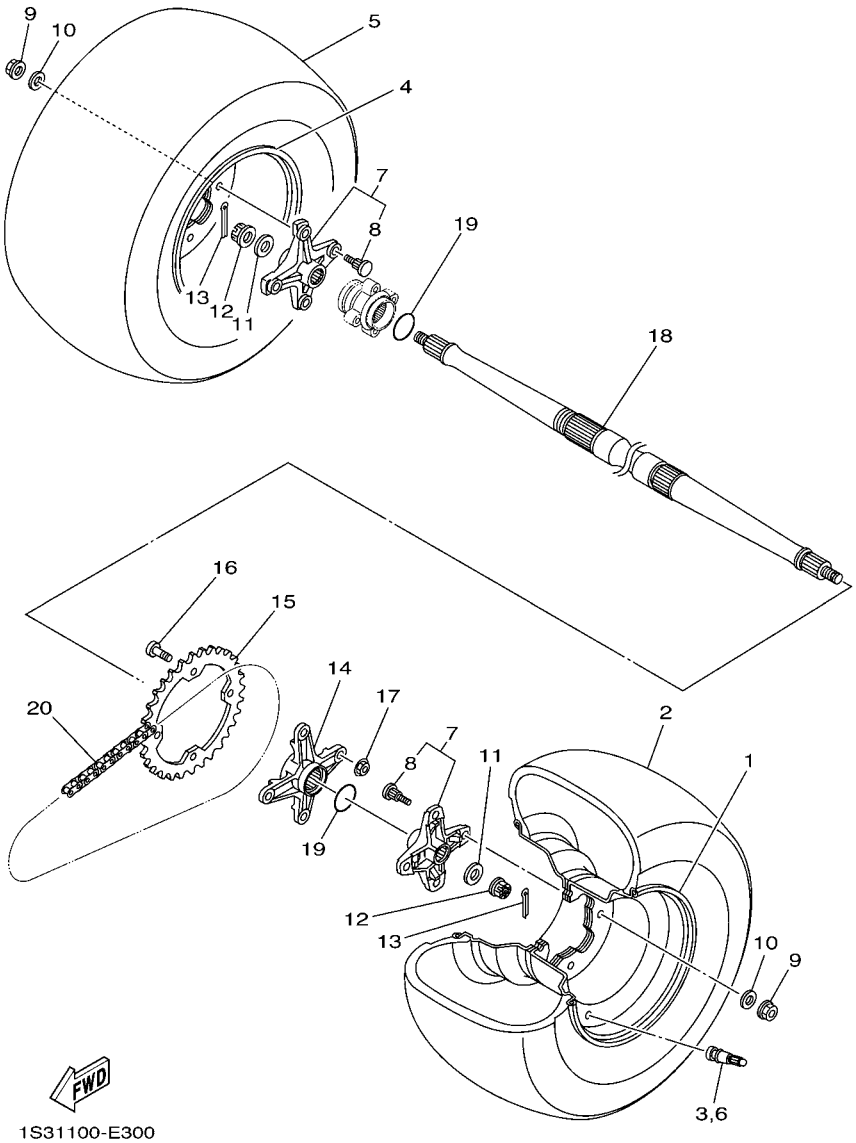

FIG. 30 REAR WHEEL

REF. NO.	PART NO.	DESCRIPTION	USA	CAN	EUR	OCE		REMARKS
1	5LP–25390–20	REAR WHEEL COMP.	1	1	1	1		
2	94110–09012	TIRE(AT20X10-R9 KT345 T/L N)	1	1	1	1		DUNLOP
3	93900–00022	VALVE, RIM (TR413)	1	1	1	1		TAIHEIYO
4	5LP–25390–20	REAR WHEEL COMP.	1	1	1	1		
5	94110–09012	TIRE(AT20X10-R9 KT345 T/L N)	1	1	1	1		DUNLOP
6	93900–00022	VALVE, RIM (TR413)	1	1	1	1		TAIHEIYO
7	1S3–25383–20	COLLAR, WHEEL	2	2	2	2		
8	90114–10013	.BOLT, SERRATION	4	4	4	4		
9	95702–10500	NUT, WITH WASHER	8	8	8	8		
10	92902–10200	WASHER	8	8	8	8		
11	90201–16023	WASHER, PLATE	2	2	2	2		
12	90171–16002	NUT, CASTLE	2	2	2	2		
13	90252–03001	PIN, COTTER	2	2	2	2		
14	1S3–25386–00	COLLAR, SPROCKET AXLE	1	1	1	1		
15	5TG–25438–10	SPROCKET, DRIVEN (38T)	1	1	1	1		
16	90109–10013	BOLT	4	4	4	4		
17	90185–10011	NUT, SELF-LOCKING	4	4	4	4		
18	1S3–25381–10	AXLE, WHEEL	1	1	1	1		
19	93210–36769	O-RING	2	2	2	2		
20	94582–13098	CHAIN (DID520MXV 98LE)	1	1	1	1		

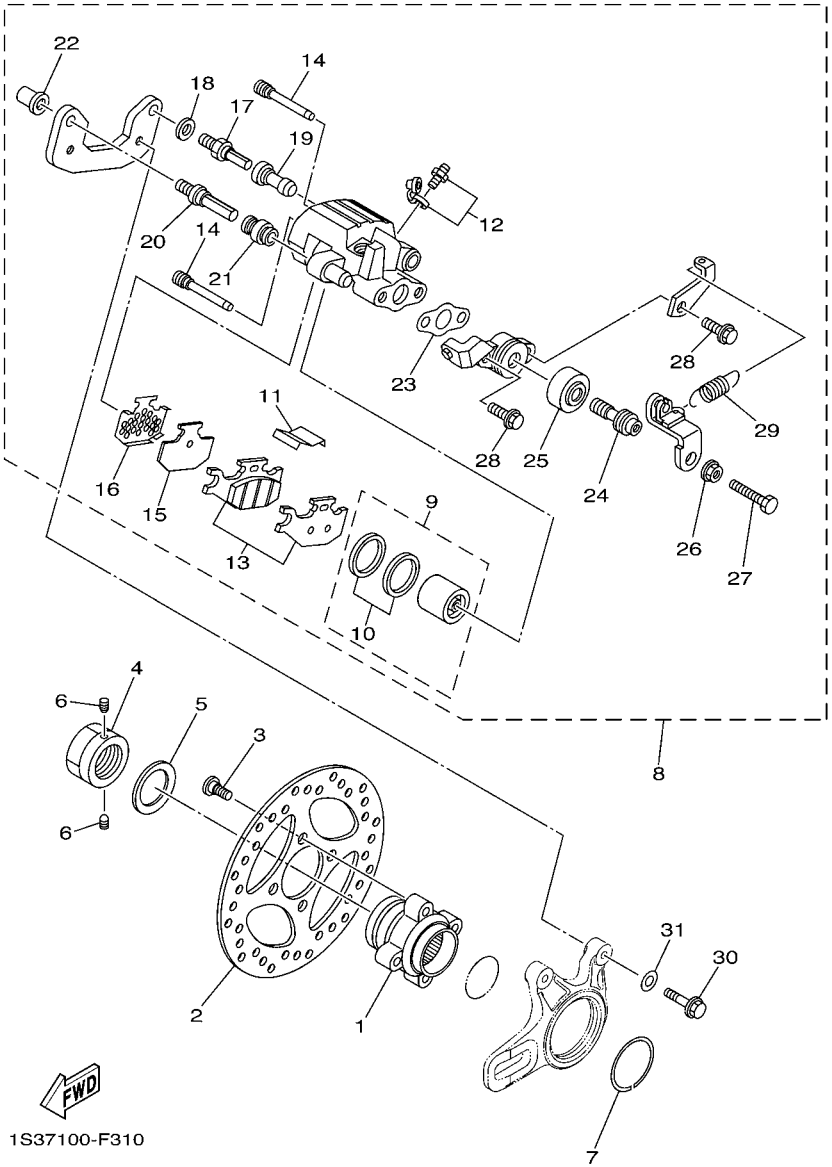

FIG. 31 REAR BRAKE CALIPER

REF. NO.	PART NO.	DESCRIPTION	USA	CAN	EUR	OCE		REMARKS
1	1S3–25712–00	BRACKET, DISC	1	1	1	1		
2	1S3–2582W–10	DISK, REAR BRAKE 2	1	1	1	1		
3	90109–08076	BOLT	4	4	4	4		
4	90179–36003	NUT	1	1	1	1		
5	90208–37001	WASHER, CONICAL SPRING	1	1	1	1		
6	90113–06055	BOLT, SET	2	2	2	2		
7	1S3–25415–00	CIRCLIP	1	1	1	1		
8	1S3–2580V–11	CALIPER ASSY, REAR 1	1	1	1	1		
9	5UG–W0057–00	.PISTON ASSY, CALIPER	1	1	1	1		
10	3GD–W0047–00	..CALIPER SEAL KIT	1	1	1	1		
11	4GY–25919–50	.SUPPORT, PAD	1	1	1	1		
12	1UY–W0048–50	.BLEED SCREW KIT	1	1	1	1		
13	1S3–W0046–01	.BRAKE PAD KIT 2	1	1	1	1		
14	5GH–25924–00	.PIN, PAD	2	2	2	2		
15	5UG–25827–00	.SHIM, CALIPER	1	1	1	1		
16	5GH–25828–00	.SHIM, CALIPER	1	1	1	1		
17	1UY–25926–51	.BOLT	1	1	1	1		
18	1UY–25938–51	.WASHER, SPRING	1	1	1	1		
19	1UY–25937–51	.BOOT 2	1	1	1	1		
20	3JD–25926–00	.BOLT	1	1	1	1		
21	3JD–25917–00	.BOOT, CALIPER	1	1	1	1		
22	3JD–25961–00	.NUT	1	1	1	1		
23	5UG–25898–00	.GASKET	1	1	1	1		
24	1S3–25978–00	.SHAFT L	1	1	1	1		
25	1UY–25974–51	.BOOT	1	1	1	1		
26	1S3–25973–00	.NUT	1	1	1	1		
27	1S3–25972–00	.ADJUSTBOLT	1	1	1	1		

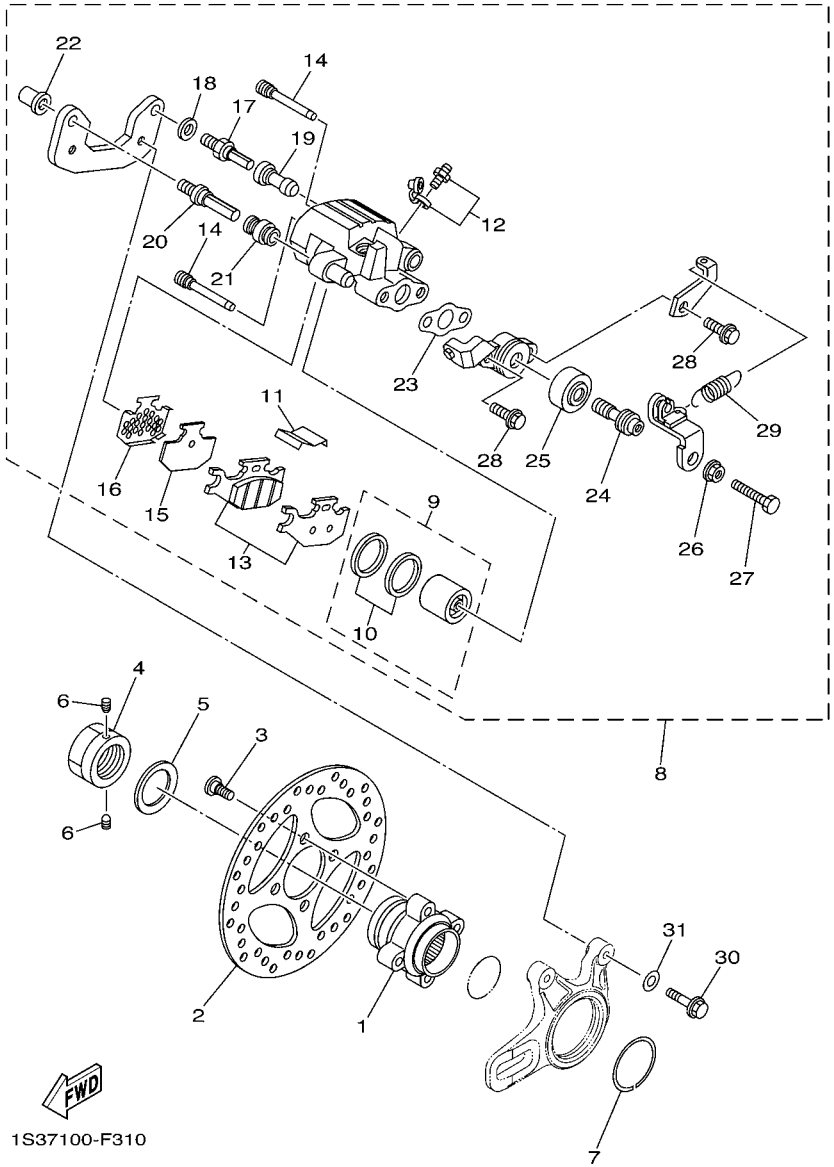

FIG. 31 REAR BRAKE CALIPER

REF. NO.	PART NO.	DESCRIPTION	USA	CAN	EUR	OCE		REMARKS
28	5UG–25833–00	.BOLT, FITTING	2	2	2	2		
29	5TG–25977–50	.SPRING, RETURN	1	1	1	1		
30	90105–08104	BOLT, FLANGE	2	2	2	2		
31	90201–08060	WASHER, PLATE	2	2	2	2		

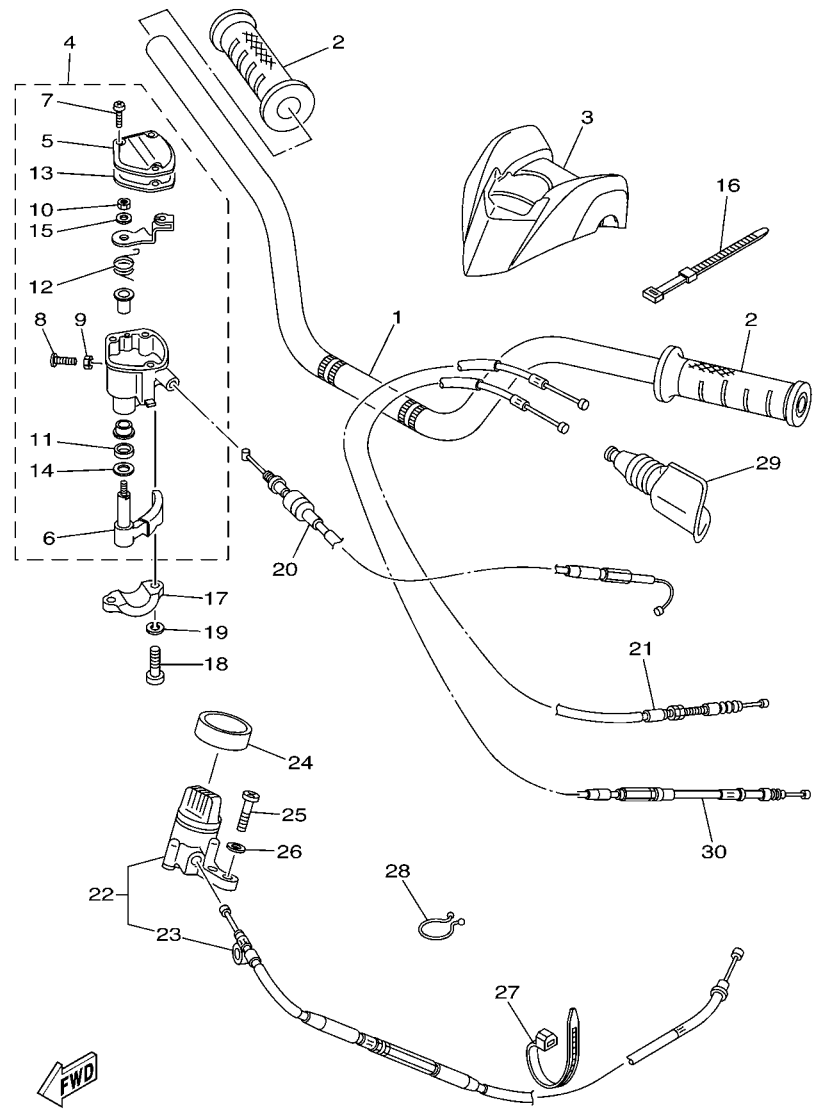

FIG. 32 STEERING HANDLE & CABLE

REF. NO.	PART NO.	DESCRIPTION	USA	CAN	EUR	OCE		REMARKS
1	1S3–26111–20	HANDLEBAR	1	1	1	1		
2	5LP–26241–00	GRIP	2	2	2	2		
3	1S3–26124–00	PROTECTOR, HANDLEBAR	1	1	1	1		
4	4KB–26250–20	THROTTLE LEVER ASSY	1	1	1	1		
5	4KB–2628F–20	.CAP, GEAR	1	1	1	1		
6	1NV–2625G–01	.LEVER, THROTTLE	1	1	1	1		
7	4KB–2632G–00	.SCREW	3	3	3	3		
8	4KB–26256–00	.SCREW, GRIP END	1	1	1	1		
9	95607–05100	.NUT, U	1	1	1	1		
10	4KB–26258–00	.NUT, LOCK	1	1	1	1		
11	93104–09025	.OIL SEAL	1	1	1	1		
12	1NV–26304–00	.SPRING	1	1	1	1		
13	4KB–2628G–00	.GASKET	1	1	1	1		
14	1NV–26129–00	.WASHER	1	1	1	1		
15	1NV–26398–00	.WASHER	1	1	1	1		
16	437–83936–01	BAND, SWITCH CORD	4	4	4	4		
17	4V4–82913–00	HOLDER, LEVER LOWER 1	1	1	1	1		
18	98502–05020	SCREW, PAN HEAD	2	2	2	2		
19	92902–05100	WASHER, SPRING	2	2	2	2		
20	1S3–26311–10	CABLE, THROTTLE 1	1	1	1	1		
21	1S3–26335–00	CABLE, CLUTCH	1	1	1	1		
22	1S3–26150–10	REV. LEVER ASSY.	1	1	1	1		
23	1S3–2637E–10	.CABLE, CONTROL 1	1	1	1	1		
24	1S3–26113–00	DAMPER	1	1	1	1		
25	98502–05018	SCREW, PAN HEAD	2	2	2	2		
26	92902–05600	WASHER, PLATE	2	2	2	2		
27	90464–13073	CLAMP	1	1	1	1		

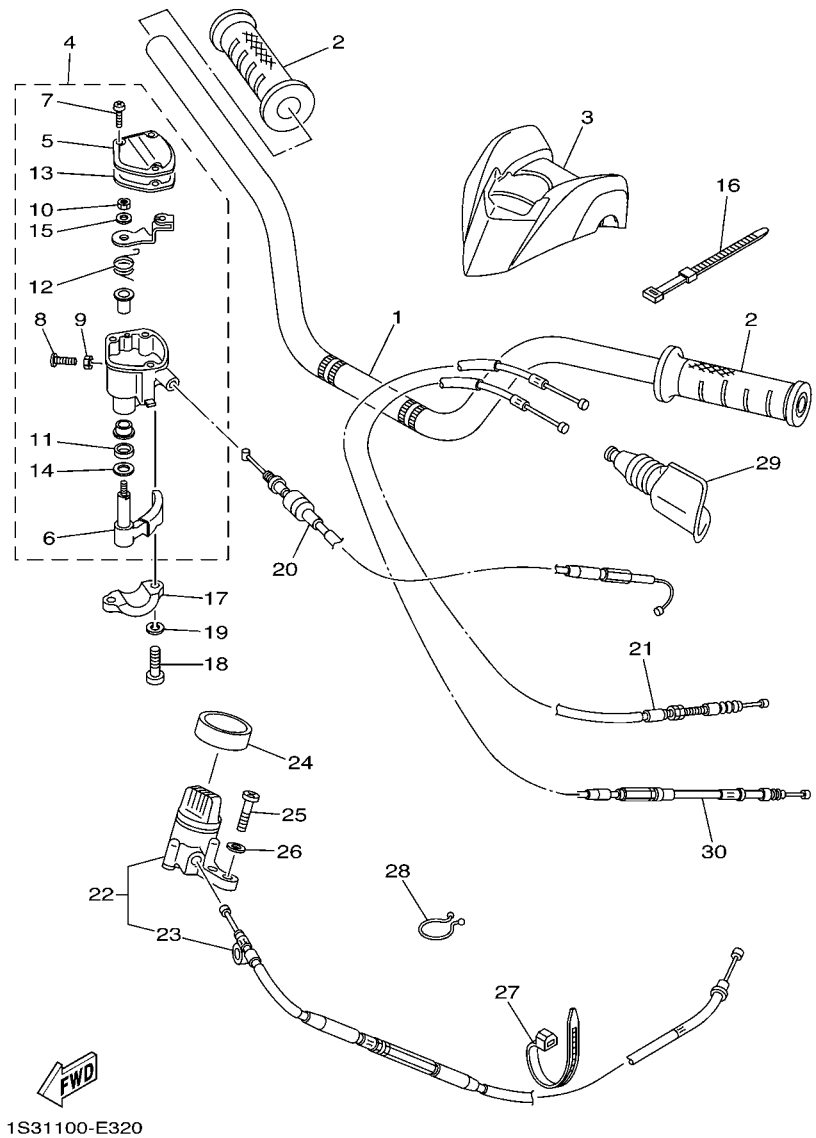

FIG. 32 STEERING HANDLE & CABLE

REF. NO.	PART NO.	DESCRIPTION	USA	CAN	EUR	OCE		REMARKS
28	90464–23041	CLAMP	1	1	1	1		
29	31A–26372–00	COVER, HANDLE LEVER 1	1	1	1	1		
30	1S3–26341–00	WIRE, BRAKE 1	1	1	1	1		

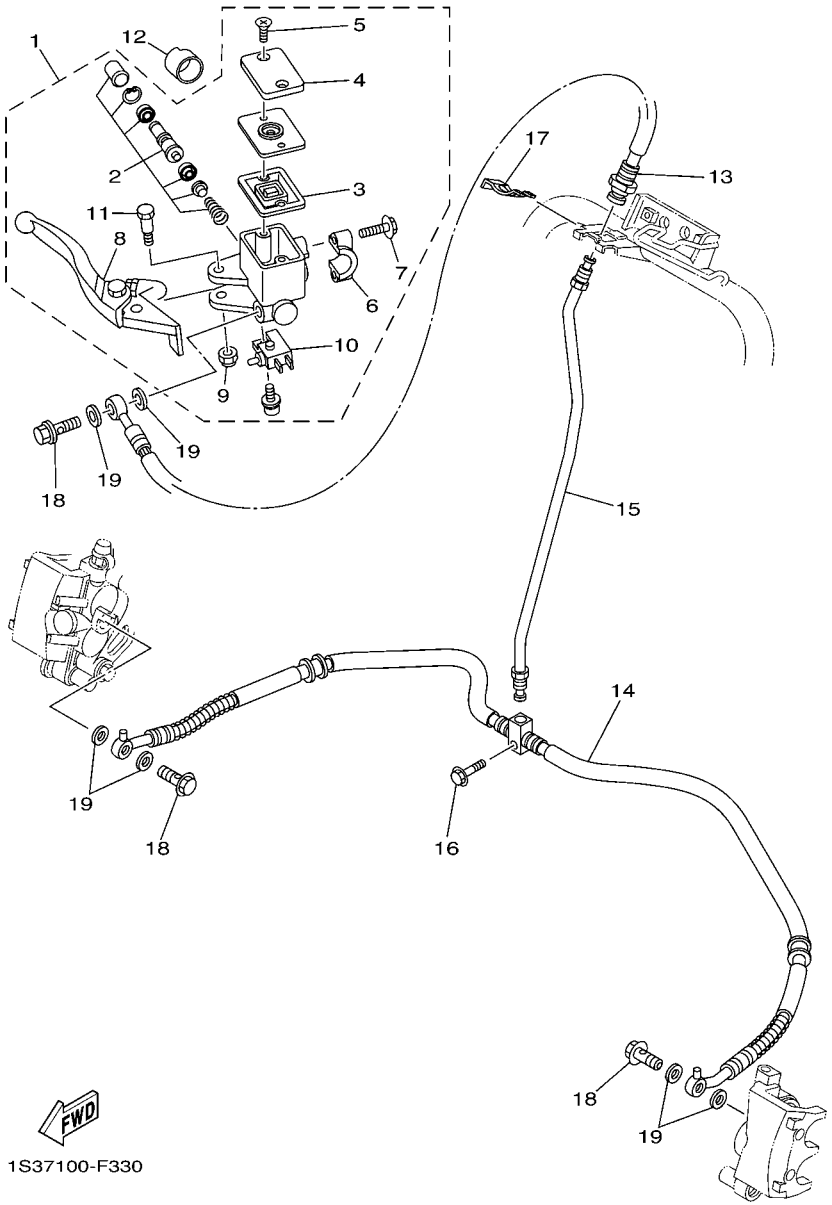

FIG. 33 FRONT MASTER CYLINDER

REF. NO.	PART NO.	DESCRIPTION	USA	CAN	EUR	OCE		REMARKS
1	5D3–2583T–00	MASTER CYLINDER ASSY	1	1	1	1		
2	5D3–W0041–00	.CYLINDER KIT, MASTER	1	1	1	1		
3	4TT–25854–00	.GASKET, DIAPHRAGM	1	1	1	1		
4	5D3–25852–00	.CAP, RESERVOIR	1	1	1	1		
5	4NK–2589H–00	.SCREW	2	2	2	2		
6	5LP–25867–00	.HOLDER	1	1	1	1		
7	5MV–25833–00	.BOLT, FITTING	2	2	2	2		
8	5D3–83922–00	.LEVER 2	1	1	1	1		
9	95604–06100	.NUT, U	1	1	1	1		
10	5D3–83980–00	.FRONT STOP SWITCH ASSY	1	1	1	1		
11	3B4–2589F–00	.BOLT, LEVER	1	1	1	1		
12	1UY–26259–00	COLLAR	1	1	1	1		
13	1S3–25872–10	HOSE, BRAKE 1	1	1	1	1		
14	5TG–25873–10	HOSE, BRAKE 2	1	1	1	1		
15	1S3–25871–10	PIPE, BRAKE	1	1	1	1		
16	95822–06025	BOLT, FLANGE	1	1	1	1		
17	2GU–25866–00	CIRCLIP	1	1	1	1		
18	90401–10015	BOLT, UNION	3	3	3	3		
19	90201–10118	WASHER, PLATE	6	6	6	6		

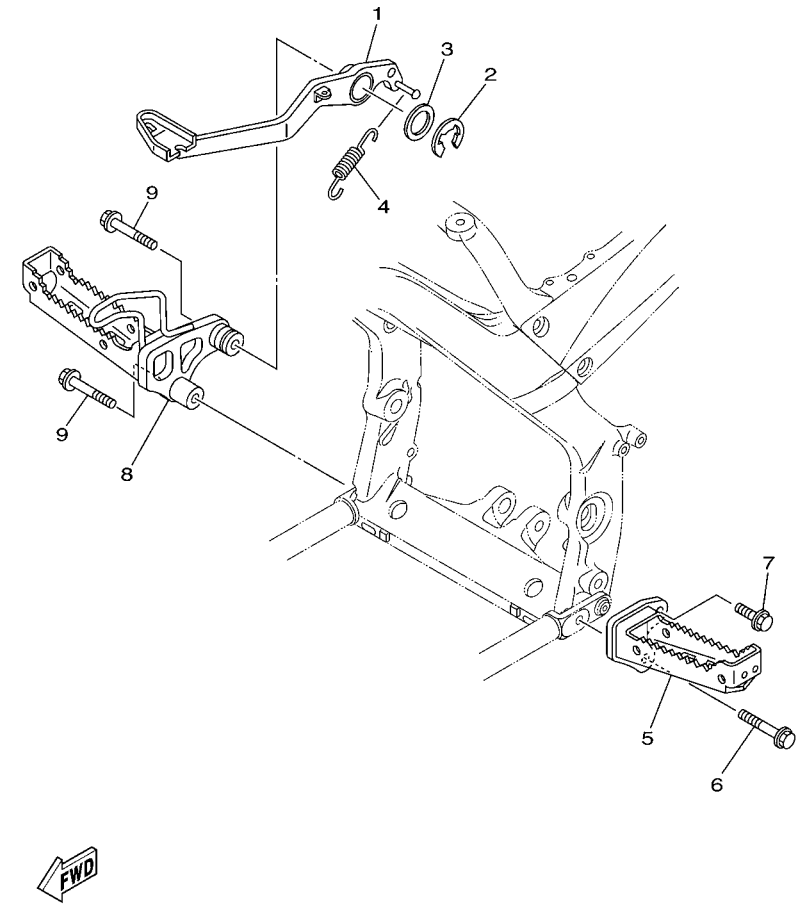

FIG. 34 STAND & FOOTREST

REF. NO.	PART NO.	DESCRIPTION	USA	CAN	EUR	OCE		REMARKS
1	1S3–27211–10	PEDAL, BRAKE	1	1	1	1		
2	93430–23054	CIRCLIP	1	1	1	1		
3	90201–266F6	WASHER, PLATE	1	1	1	1		
4	90506–20380	SPRING, TENSION	1	1	1	1		
5	1S3–27411–10	FOOTREST 1	1	1	1	1		
6	90105–10294	BOLT, FLANGE	1	1	1	1		
7	95812–10030	BOLT, FLANGE	1	1	1	1		
8	1S3–27421–10	FOOTREST 2	1	1	1	1		
9	90105–10294	BOLT, FLANGE	2	2	2	2		

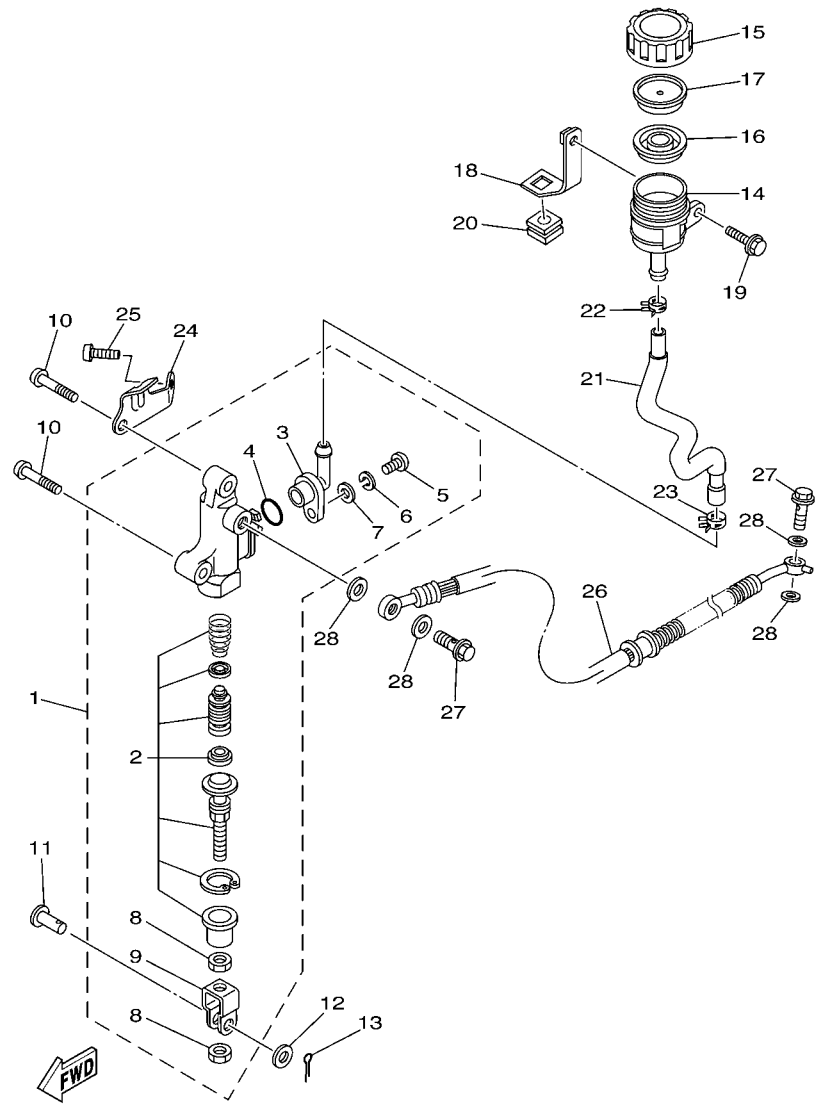

FIG. 35 REAR MASTER CYLINDER

REF. NO.	PART NO.	DESCRIPTION	USA	CAN	EUR	OCE		REMARKS
1	1S3–2580E–00	REAR MASTER CYLINDER ASSY	1	1	1	1		
2	1S3–W0042–50	.CYLINDER KIT, MASTER	1	1	1	1		
3	1AE–2582A–00	.JOINT	1	1	1	1		
4	93210–15620	.O-RING	1	1	1	1		
5	98506–04012	.SCREW, PAN HEAD	1	1	1	1		
6	92906–04100	.WASHER, SPRING	1	1	1	1		
7	92906–04600	.WASHER, PLATE	1	1	1	1		
8	4SS–27218–00	.NUT	2	2	2	2		
9	2YK–27222–00	.YOKE	1	1	1	1		
10	92012–08035	BOLT, BUTTON HEAD	2	2	2	2		
11	90240–08124	PIN, CLEVIS	1	1	1	1		
12	90201–08083	WASHER, PLATE	1	1	1	1		
13	91401–16012	PIN, COTTER	1	1	1	1		
14	5JJ–25894–00	TANK, RESERVOIR	1	1	1	1		
15	3XP–25852–50	CAP, RESERVOIR	1	1	1	1		
16	2VN–25854–00	GASKET, DIAPHRAGM	1	1	1	1		
17	2VN–25855–00	BUSH,DIAPHRAGM	1	1	1	1		
18	1S3–26292–00	STAY	1	1	1	1		
19	90119–06137	BOLT, WITH WASHER	1	1	1	1		
20	90480–15009	GROMMET	1	1	1	1		
21	1S3–25895–00	HOSE, RESERVOIR	1	1	1	1		
22	90467–11044	CLIP	1	1	1	1		
23	90467–14057	CLIP	1	1	1	1		
24	1S3–27453–00	COVER 1	1	1	1	1		
25	92012–08016	BOLT, BUTTON HEAD	1	1	1	1		
26	1S3–25874–10	HOSE, BRAKE	1	1	1	1		
27	90401–10015	BOLT, UNION	2	2	2	2		

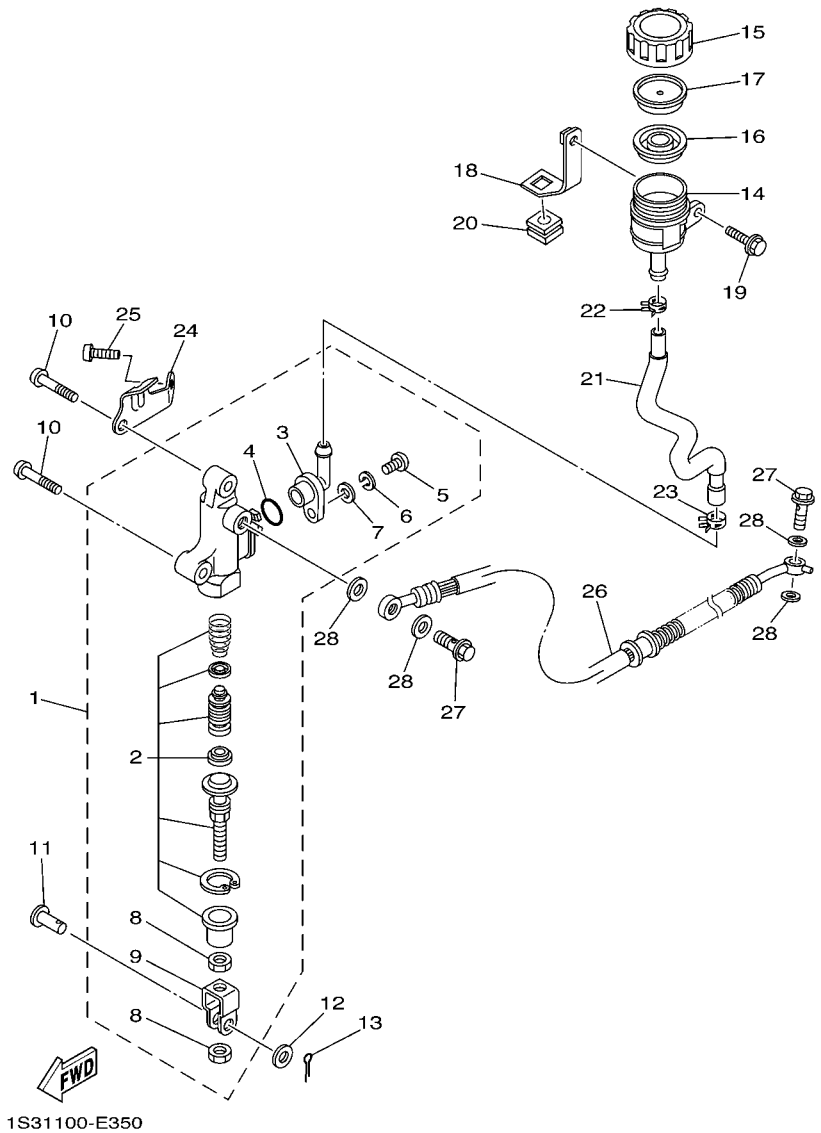

FIG. 35 REAR MASTER CYLINDER

REF. NO.	PART NO.	DESCRIPTION	USA	CAN	EUR	OCE		REMARKS
28	90201–10118	WASHER, PLATE	4	4	4	4		

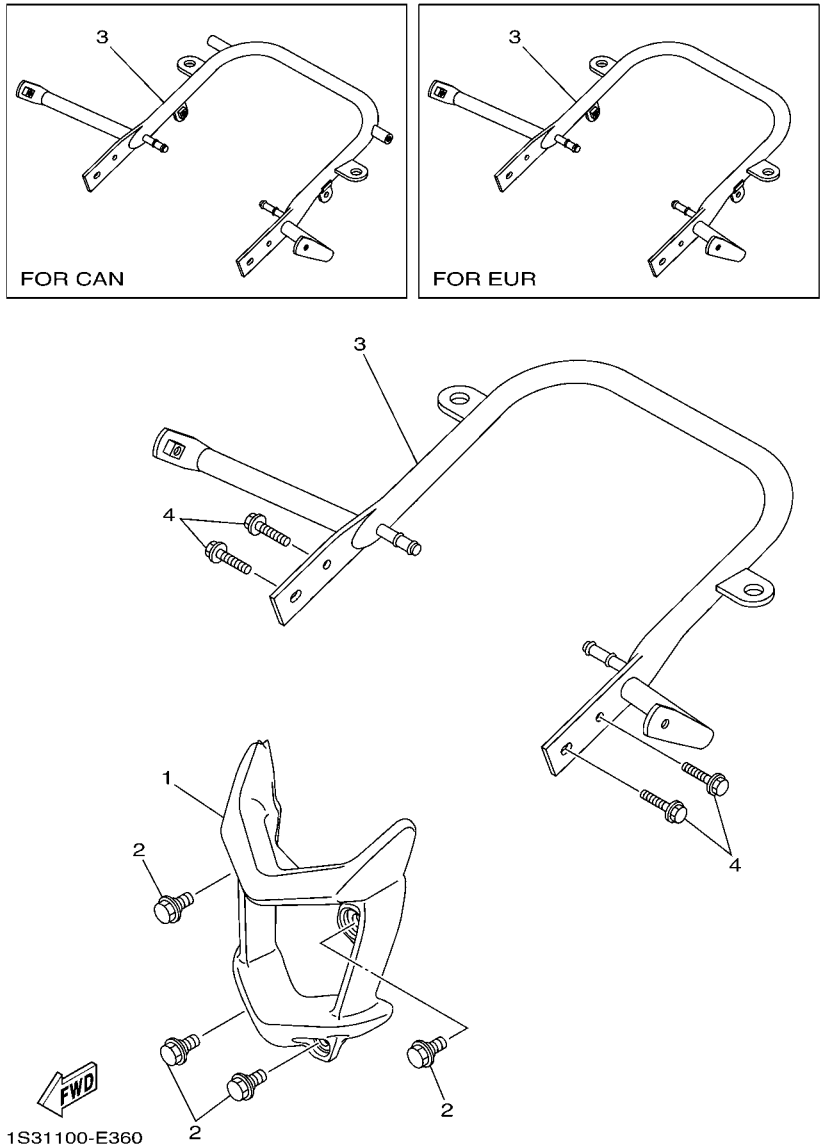

FIG. 36 GUARD

REF. NO.	PART NO.	DESCRIPTION	USA	CAN	EUR	OCE		REMARKS
1	1S3–2845N–00	BAR, CARRY FRONT	1	1	1	1		
2	90109–08100	BOLT	4	4	4	4		
3	1S3–2845R–30	BAR, CARRY REAR	1			1		
	1S3–2845R–40	BAR, CARRY REAR		1				
	1S3–2845R–50	BAR, CARRY REAR			1			
4	90105–08142	BOLT, FLANGE	4	4	4	4		

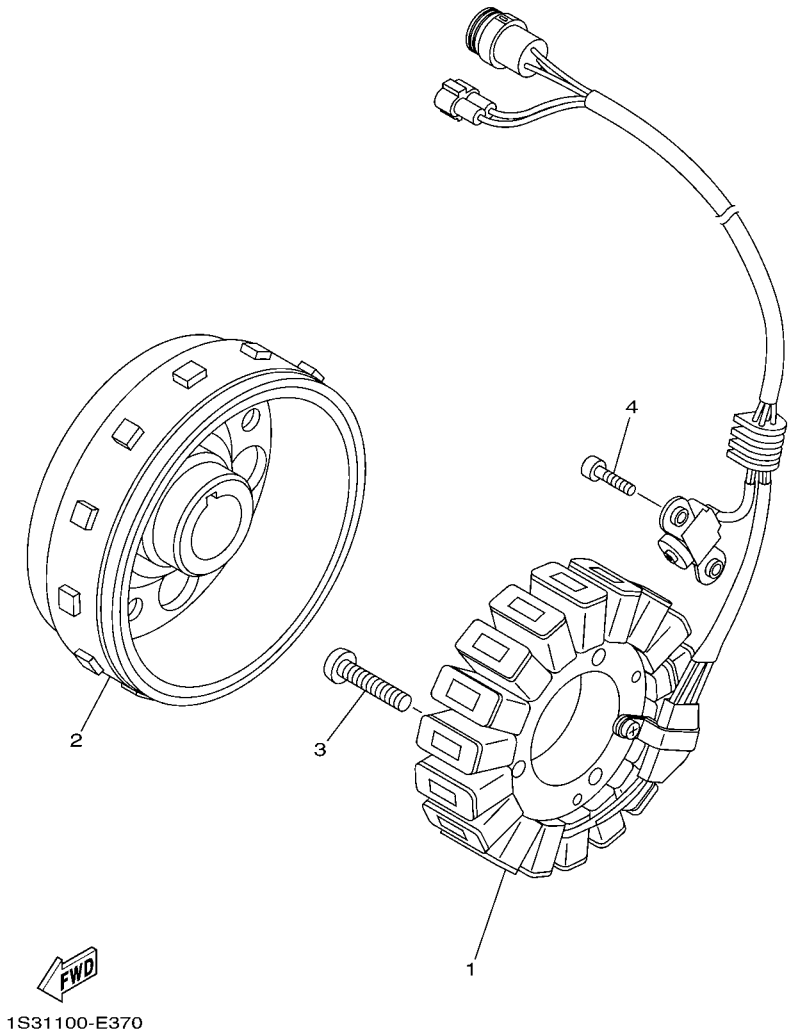

FIG. 37 GENERATOR

REF. NO.	PART NO.	DESCRIPTION	USA	CAN	EUR	OCE		REMARKS
1	1S3–81410–00	STATOR ASSY	1	1	1	1		
2	1S3–81450–00	ROTOR ASSY	1	1	1	1		
3	92012–06030	BOLT, BUTTON HEAD	3	3	3	3		
4	90110–05031	BOLT, HEXAGON SOCKET HEAD	2	2	2	2		

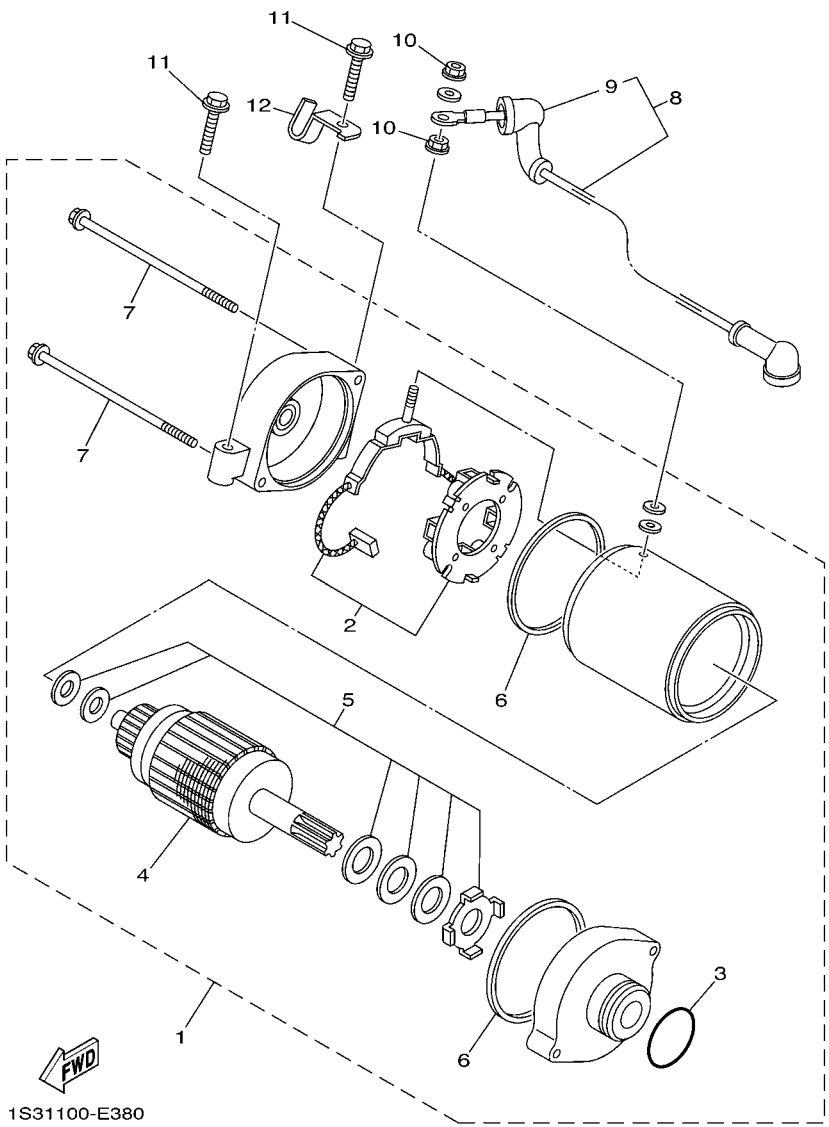

FIG. 38 STARTING MOTOR

REF. NO.	PART NO.	DESCRIPTION	USA	CAN	EUR	OCE		REMARKS
1	1S3–81890–00	MOTOR ASSY	1	1	1	1		
2	3AJ–81801–00	.BRUSH SET	1	1	1	1		
3	1FK–81847–00	.O-RING	1	1	1	1		
4	4NK–81850–00	.ARMATURE ASSY	1	1	1	1		
5	3KS–81809–00	.WASHER KIT	1	1	1	1		
6	11H–81844–00	.GASKET	2	2	2	2		
7	3AJ–81826–00	.BOLT	2	2	2	2		
8	1S3–81815–00	CORD, STARTER MOTOR	1	1	1	1		
9	4G0–81871–00	.CAP	1	1	1	1		
10	4XV–8182A–00	NUT	2	2	2	2		
11	95812–06030	BOLT, FLANGE	2	2	2	2		
12	1S3–15484–00	CLAMP 2	1	1	1	1		

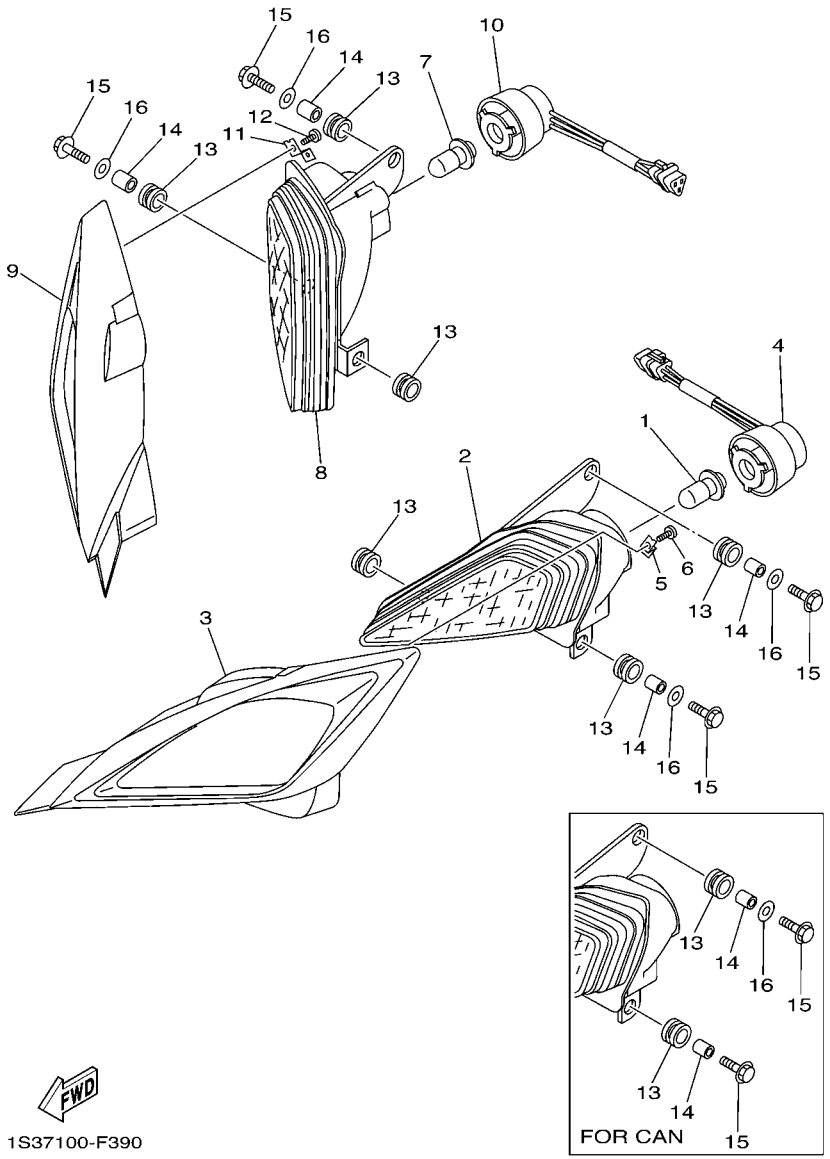

FIG. 39 HEADLIGHT

REF. NO.	PART NO.	DESCRIPTION	USA	CAN	EUR	OCE		REMARKS
1	4KB–84314–01	BULB (12V-30/30W)	1	1	1	1		
2	5TG–84110–12	HEADLIGHT UNIT ASSY	1	1	1	1		
3	1S3–84165–00	RIM, HEADLIGHT COVER 1	1	1	1	1		
4	5TG–84140–01	SOCKET CORD ASSY	1	1	1	1		
5	1S3–8413J–00	PLATE, FITTING	1	1	1	1		
6	97707–30510	SCREW, TAPPING	1	1	1	1		
7	4KB–84314–01	BULB (12V-30/30W)	1	1	1	1		
8	5TG–84310–12	HEADLIGHT UNIT ASSY	1	1	1	1		
9	1S3–84166–00	RIM, HEADLIGHT COVER 2	1	1	1	1		
10	5TG–84340–01	SOCKET CORD ASSY 1	1	1	1	1		
11	1S3–8413J–00	PLATE, FITTING	1	1	1	1		
12	97707–30510	SCREW, TAPPING	1	1	1	1		
13	90480–14102	GROMMET	6	6	6	6		
14	90387–07598	COLLAR	4	4	4	4		
15	95812–06030	BOLT, FLANGE	4	4	4	4		
16	90201–06078	WASHER, PLATE	4	2	4	4		

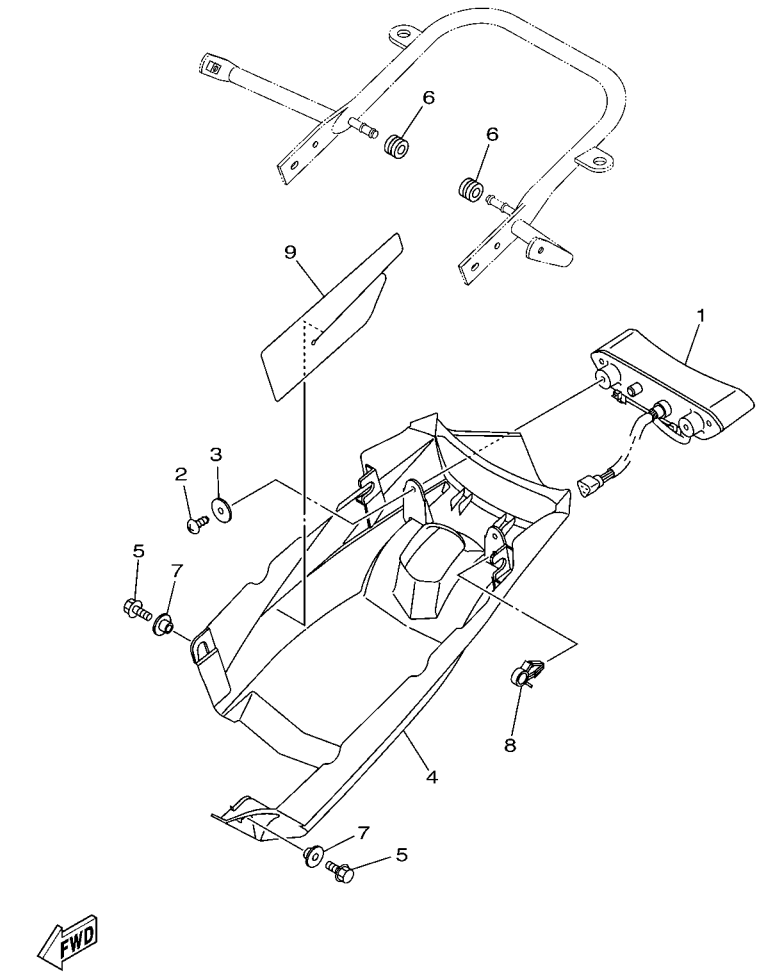

FIG. 40 TAILLIGHT

REF. NO.	PART NO.	DESCRIPTION	USA	CAN	EUR	OCE		REMARKS
1	1S3–84710–00	TAILLIGHT UNIT ASSY	1			1		
2	97702–50016	SCREW, TAPPING	2			2		
3	90201–05025	WASHER, PLATE	2			2		
4	1S3–84716–40	COVER, TAILLIGHT	1			1		
5	95802–06010	BOLT, FLANGE	2			2		
6	90480–14101	GROMMET	2			2		
7	90387–06153	COLLAR	2			2		
8	90464–15157	CLAMP	1			1		
9	1S3–84736–00	DAMPER, TAIL 1	1			1		

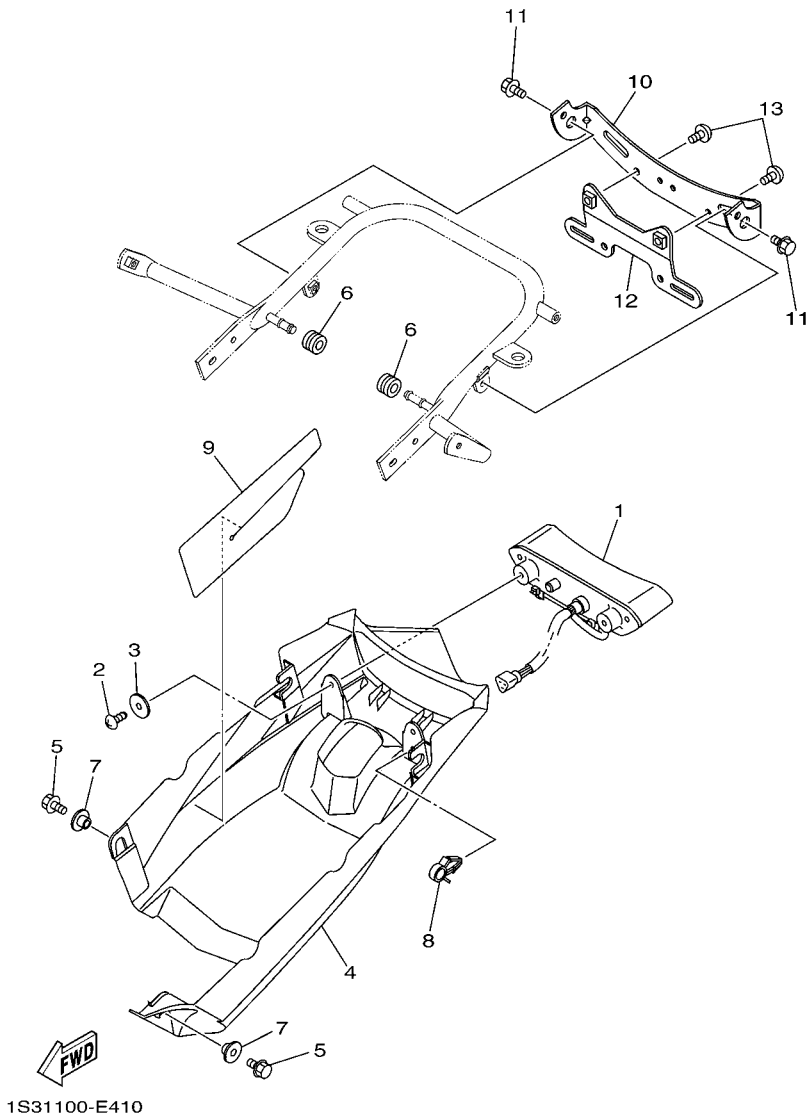

FIG. 41 TAILLIGHT 2

REF. NO.	PART NO.	DESCRIPTION	USA	CAN	EUR	OCE		REMARKS
1	1S3–84710–00	TAILLIGHT UNIT ASSY		1	1			
2	97702–50016	SCREW, TAPPING		2	2			
3	90201–05025	WASHER, PLATE		2	2			
4	1S3–84716–40	COVER, TAILLIGHT		1	1			
5	95802–06010	BOLT, FLANGE		2	2			
6	90480–14101	GROMMET		2	2			
7	90387–06153	COLLAR		2	2			
8	90464–15157	CLAMP		1	1			
9	1S3–84736–00	DAMPER, TAIL 1		1	1			
10	1S3–84703–10	BRACKET		1	1			
11	95802–06010	BOLT, FLANGE		2	2			
12	1S3–84751–10	BRACKET, LICENSE		1				
13	92012–06010	BOLT, BUTTON HEAD		2				

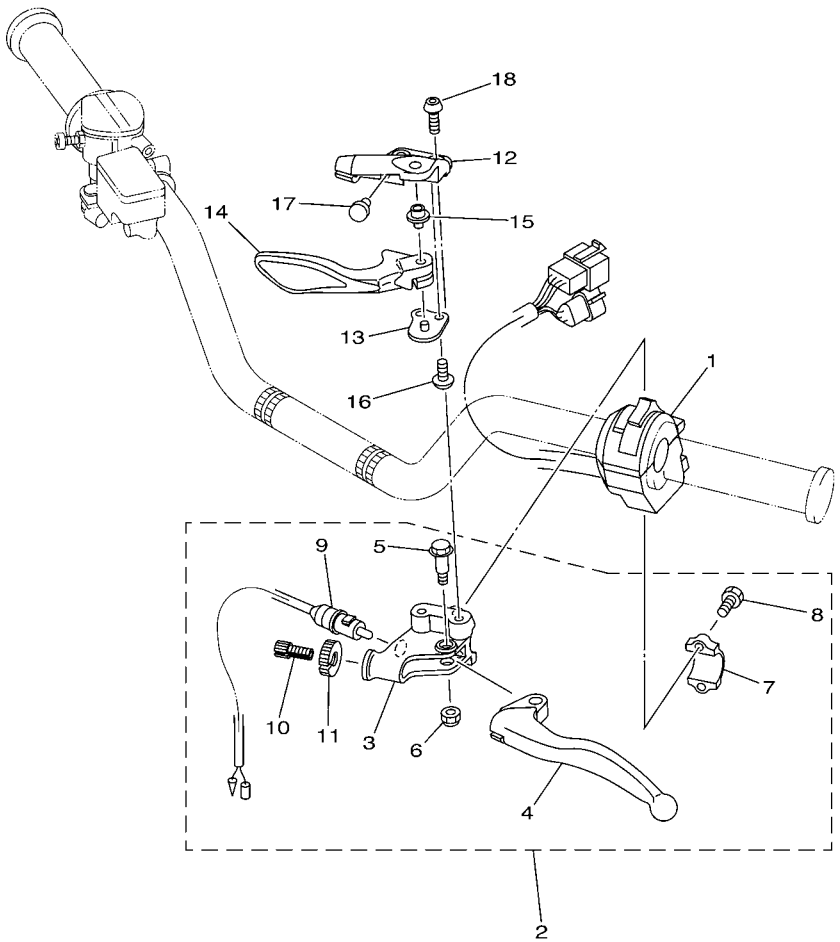

1S31100-E420

FIG. 42 HANDLE SWITCH & LEVER

REF. NO.	PART NO.	DESCRIPTION	USA	CAN	EUR	OCE		REMARKS
1	1S3–83973–00	SWITCH, HANDLE 3	1	1	1	1		
2	5YT–82910–10	LEVER HOLDER ASSY (LEFT)	1	1	1	1		
3	5YT–82911–10	.HOLDER, LEVER 1	1	1	1	1		
4	2HT–83912–00	.LEVER 1	1	1	1	1		
5	90109–06798	.BOLT	1	1	1	1		
6	95602–06100	.NUT, U	1	1	1	1		
7	5TG–82913–00	.HOLDER, LEVER LOWER 1	1	1	1	1		
8	97002–05016	.BOLT	2	2	2	2		
9	5KM–82917–00	.SWITCH	1	1	1	1		
10	90123–08046	.BOLT	1	1	1	1		
11	90179–08148	.NUT	1	1	1	1		
12	1S3–25727–00	BRACKET, LEVER	1	1	1	1		
13	5D3–25689–00	PLATE, GUIDE	1	1	1	1		
14	1S3–25726–00	LEVER, BRAKE	1	1	1	1		
15	5TG–83923–00	COLLAR, LEVER 2	1	1	1	1		
16	92012–06012	BOLT, BUTTON HEAD	2	2	2	2		
17	90338–07007	PLUG	1	1	1	1		
18	92014–06016	BOLT, BUTTON HEAD	2	2	2	2		

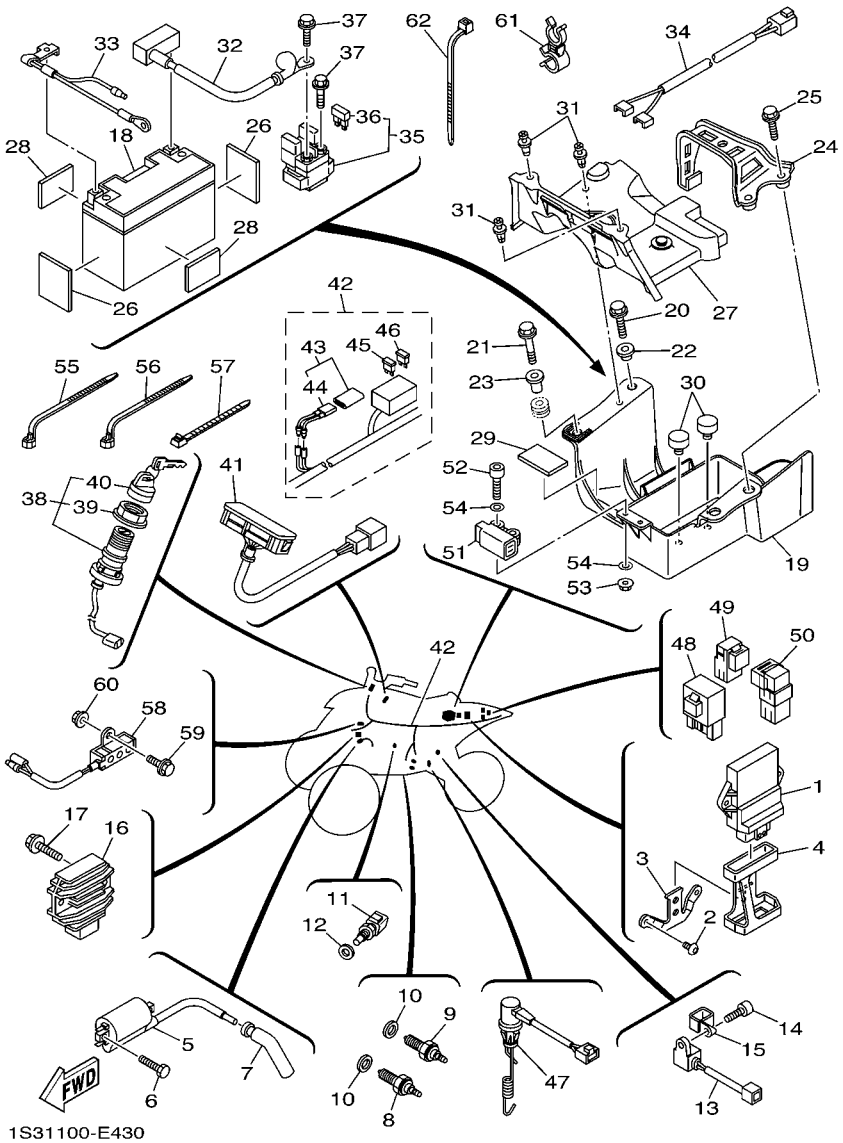

FIG. 43 ELECTRICAL 1

REF. NO.	PART NO.	DESCRIPTION	USA	CAN	EUR	OCE		REMARKS
1	1S3–8591A–00	ENGINE CONTROL UNIT ASSY	1	1	1	1		
2	92012–06010	BOLT, BUTTON HEAD	2	2	2	2		
3	1S3–21274–00	BRACKET, C.D.I. UNIT	1	1	1	1		
4	1S3–85546–00	BAND	1	1	1	1		
5	3TB–82310–00	IGNITION COIL ASSY	1	1	1	1		
6	97002–05020	BOLT	2	2	2	2		
7	5VK–82370–00	PLUG CAP ASSY	1	1	1	1		
8	5LP–82540–01	NEUTRAL SWITCH ASSY	1	1	1	1		
9	3GB–82540–01	NEUTRAL SWITCH ASSY	1	1	1	1		
10	90430–10148	GASKET	2	2	2	2		
11	5PS–85790–00	THERMOSENSOR ASSY	1	1	1	1		
12	90430–12202	GASKET	1	1	1	1		
13	1S3–83755–00	SENSOR, SPEED	1	1	1	1		
14	91312–06016	BOLT	1	1	1	1		
15	90461–10004	CLAMP	1	1	1	1		
16	5BN–81960–00	RECTIFIER & REGULATOR ASSY	1	1	1	1		
17	95802–06025	BOLT, FLANGE	2	2	2	2		
18	5GJ–82100–01	BATTERY ASSY (GS GT9B-4)	1	1	1	1		
19	1S3–8212B–00	BOX, BATTERY 1	1	1	1	1		
20	90105–06084	BOLT, FLANGE	1	1	1	1		
21	95802–06030	BOLT, FLANGE	1	1	1	1		
22	90387–06153	COLLAR	1	1	1	1		
23	90387–06168	COLLAR	1	1	1	1		
24	1S3–82128–00	BRACKET, BATTERY	1	1	1	1		
25	95802–06020	BOLT, FLANGE	2	2	2	2		
26	1S3–82123–00	SEAT, BATTERY	2	2	2	2		
27	1S3–82129–00	COVER, BATTERY	1	1	1	1		

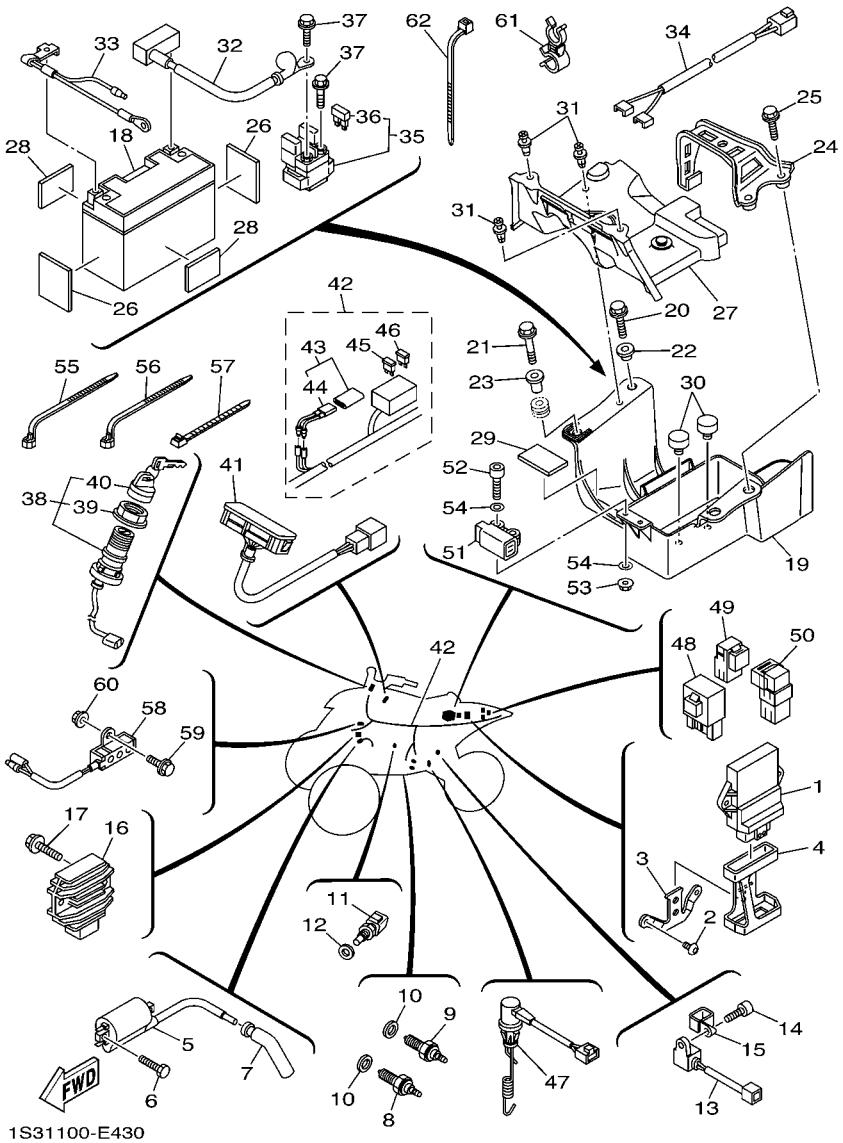

FIG. 43 ELECTRICAL 1

REF. NO.	PART NO.	DESCRIPTION	USA	CAN	EUR	OCE		REMARKS
28	1S3–82122–00	SEAT, BATTERY	2	2	2	2		
29	22F–2139X–00	DAMPER	1	1	1	1		
30	5TG–82121–10	PAD, BATTERY	2	2	2	2		
31	90269–06002	RIVET	3	3	3	3		
32	1S3–82115–00	WIRE, PLUS LEAD	1	1	1	1		
33	1S3–82116–10	WIRE, MINUS LEAD	1	1	1	1		
34	1S3–82541–00	WIRE, LEAD	1	1	1	1		
35	1S3–81940–00	STARTER RELAY ASSY	1	1	1	1		
36	2GH–82151–00	.FUSE (20A-BL)	2	2	2	2		
37	95022–06008	BOLT, FLANGE	2	2	2	2		
38	5LP–82510–00	MAIN SWITCH ASSY	1	1	1	1		
39	3HN–82569–00	.NUT, MAIN SWITCH	1	1	1	1		
40	3HN–82579–00	.CAP, KEY	1	1	1	1		
41	1S3–83530–00	PILOT LIGHT ASSY	1	1	1	1		
42	1S3–82590–10	WIRE HARNESS ASSY	1	1	1	1		
43	5GT–82180–00	.CIRCUIT BREAKER ASSY	1	1	1	1		
44	5GT–82560–00	..THERMO SWITCH ASSY	1	1	1	1		
45	5JJ–82151–10	.FUSE (15A-BL)	2	2	2	2		
46	5JJ–82151–30	.FUSE (10A-BL)	4	4	4	4		
47	1S3–82530–10	STOP SWITCH ASSY	1	1	1	1		
48	5VK–81950–30	RELAY ASSY	1	1	1	1		
49	5EA–81950–20	RELAY ASSY	1	1	1	1		
50	5DM–81950–00	RELAY ASSY(G8HN-1C4T-DJ-Y52)	1	1	1	1		
51	5PS–82576–01	LEAN ANGLE SENSOR	1	1	1	1		
52	91312–04025	BOLT	2	2	2	2		
53	95702–04500	NUT, WITH WASHER	2	2	2	2		
54	90201–04030	WASHER, PLATE	4	4	4	4		

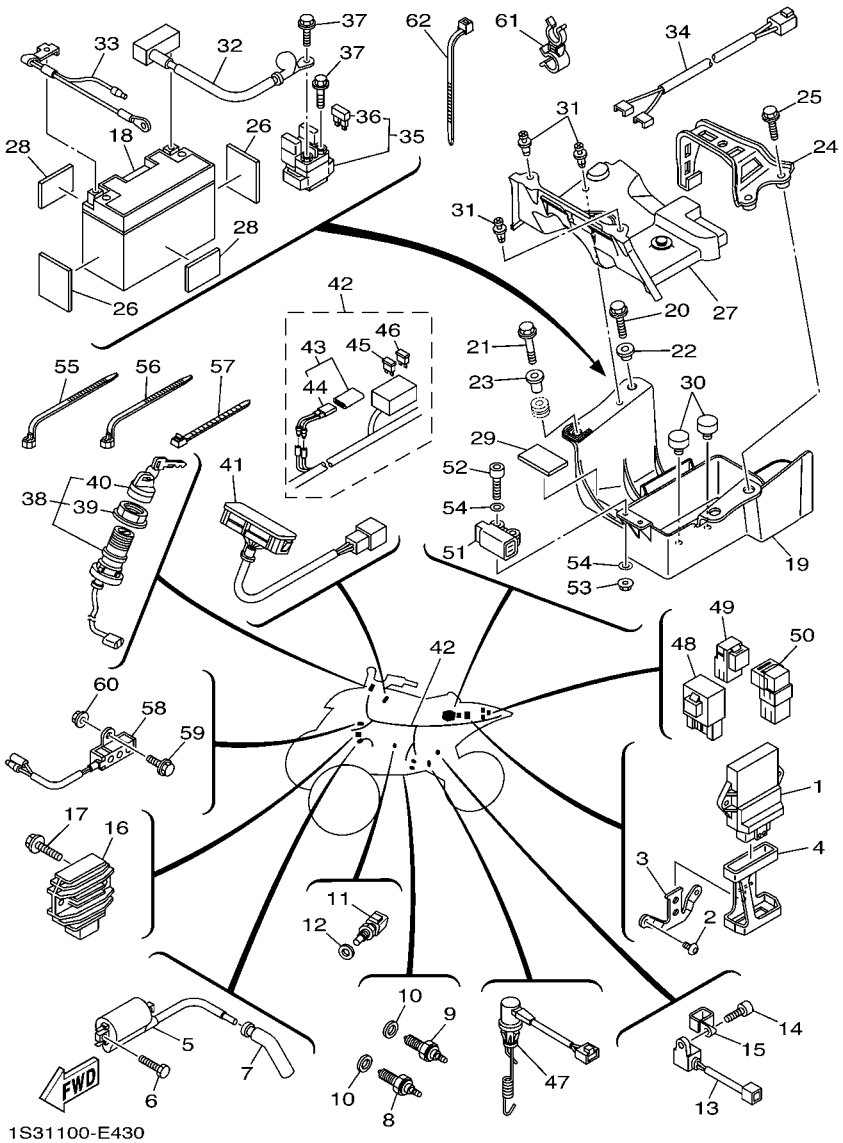

FIG. 43 ELECTRICAL 1

REF. NO.	PART NO.	DESCRIPTION	USA	CAN	EUR	OCE		REMARKS
55	90464–13077	CLAMP	1	1	1	1		
56	90464–15195	CLAMP	1	1	1	1		
57	90465–13M11	CLAMP	2	2	2	2		
58	1S3–85370–00	RESISTOR ASSY	1	1	1	1		
59	95802–06016	BOLT, FLANGE	1	1	1	1		
60	95702–06500	NUT, FLANGE	1	1	1	1		
61	90464–16013	CLAMP	1	1	1	1		
62	90465–10098	CLAMP	1	1	1	1		

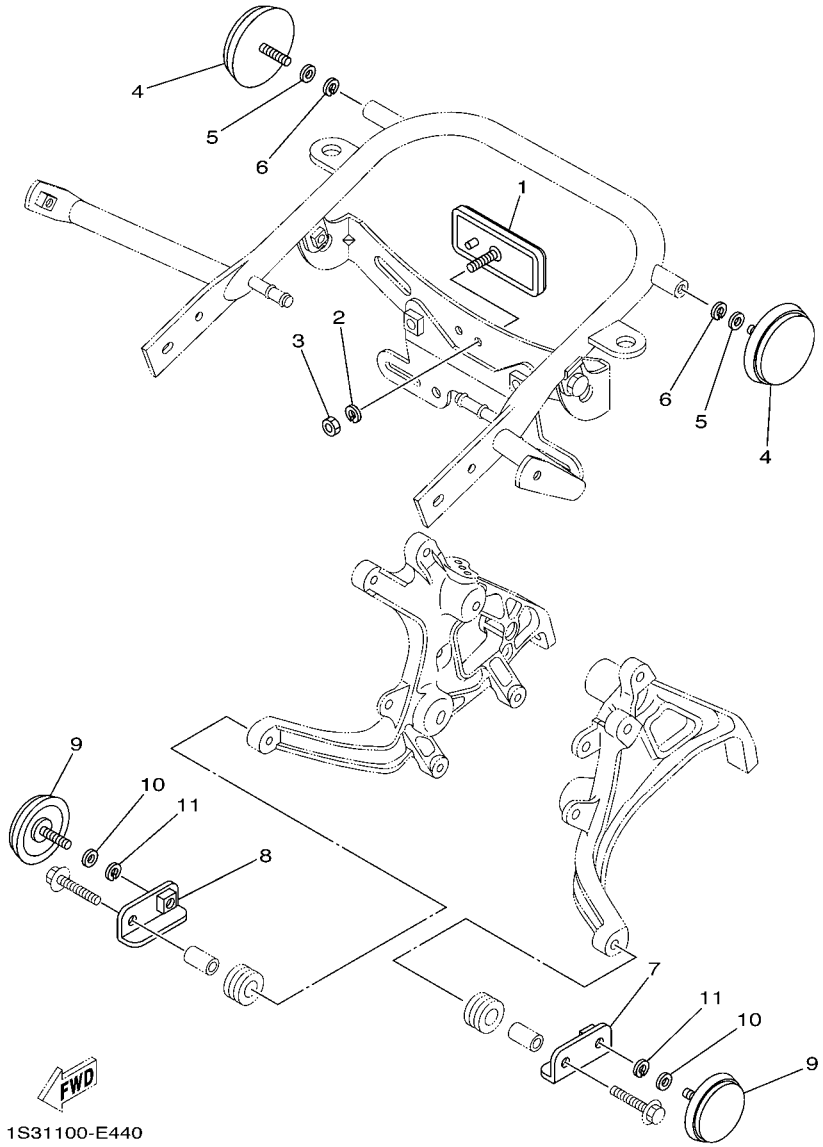

FIG. 44 ELECTRICAL 2

REF. NO.	PART NO.	DESCRIPTION	USA	CAN	EUR	OCE		REMARKS
1	3Y6–85130–02	REAR REFLECTOR ASSY		1	1			
2	92902–05100	WASHER, SPRING		1	1			
3	95302–05600	NUT		1	1			
4	449–85131–02	REFLECTOR, REAR 1		2				
5	92902–05200	WASHER		2				
6	92902–05100	WASHER, SPRING		2				
7	1S3–85112–10	BRACKET, REFLECTOR 1		1				
8	1S3–85122–10	BRACKET, REFLECTOR 2		1				
9	2EK–85111–00	REFLECTOR, FRONT 1		2				
10	92902–05200	WASHER		2				
11	92902–05100	WASHER, SPRING		2				

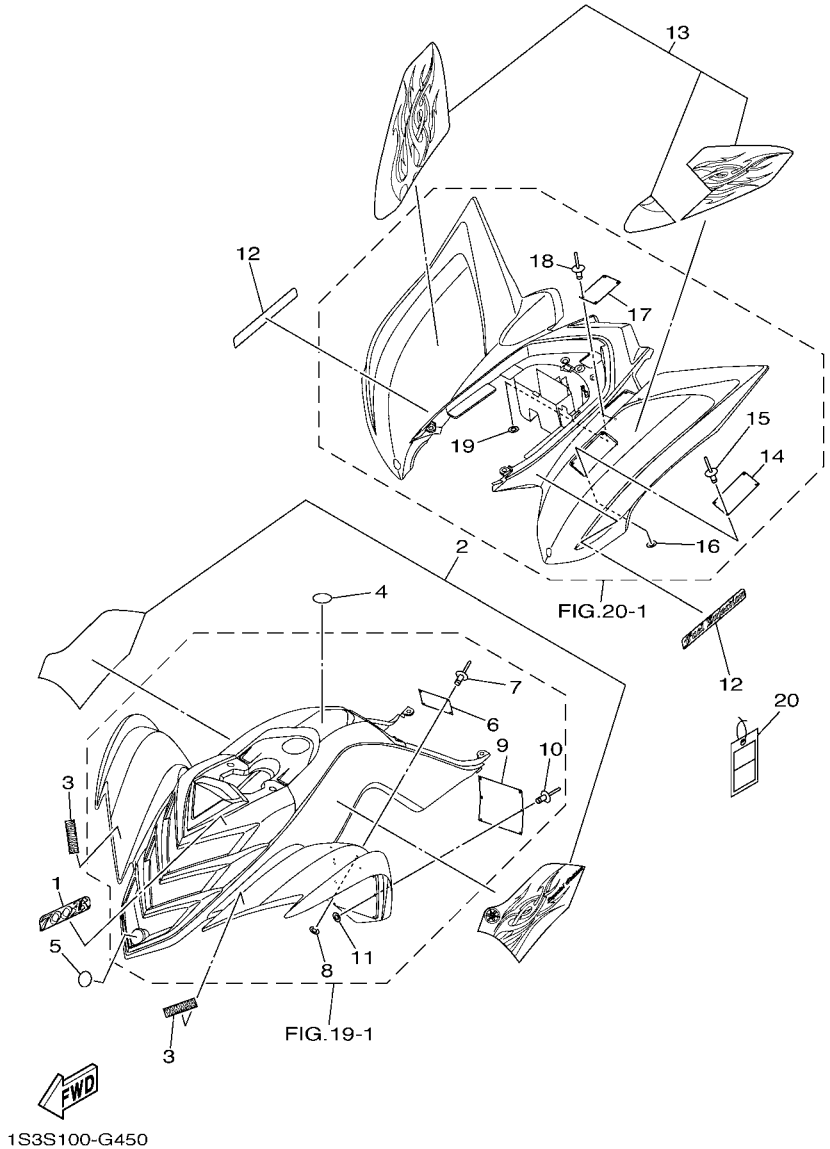

FIG. 45 EMBLEM & LABEL 1

REF. NO.	PART NO.	DESCRIPTION	USA	CAN	EUR	OCE		REMARKS
1	1S3–21565–80	EMBLEM, 2	1					
2	1S3–2159A–40	GRAPHIC SET 1	1					
3	3GD–2153E–10	EMBLEM, YAMAHA	2					
4	5D3–2164B–00	EMBLEM,3D	1					
5	5KM–2175B–00	TUNING FORK MARK	1					
6	5FE–21697–01	LABEL, CAUTION 2	1					ENGLISH
7	90267–32004	RIVET, BLIND	4					
8	90201–03008	WASHER, PLATE	4					
9	5FE–21568–01	LABEL, WARNING	1					ENGLISH
10	90267–32004	RIVET, BLIND	6					
11	90201–03008	WASHER, PLATE	6					
12	1S3–2163G–20	EMBLEM 1	2					
13	1S3–2165A–B0	GRAPHIC SET,REAR FENDER	1					
14	5LP–21696–00	LABEL, CAUTION	1					ENGLISH
15	90267–32004	RIVET, BLIND	4					
16	90201–03008	WASHER, PLATE	4					
17	5FE–2151H–01	LABEL 5	1					ENGLISH
18	90267–32004	RIVET, BLIND	4					
19	90201–03008	WASHER, PLATE	4					
20	5LP–2819R–00	TAG, WARNING	1					

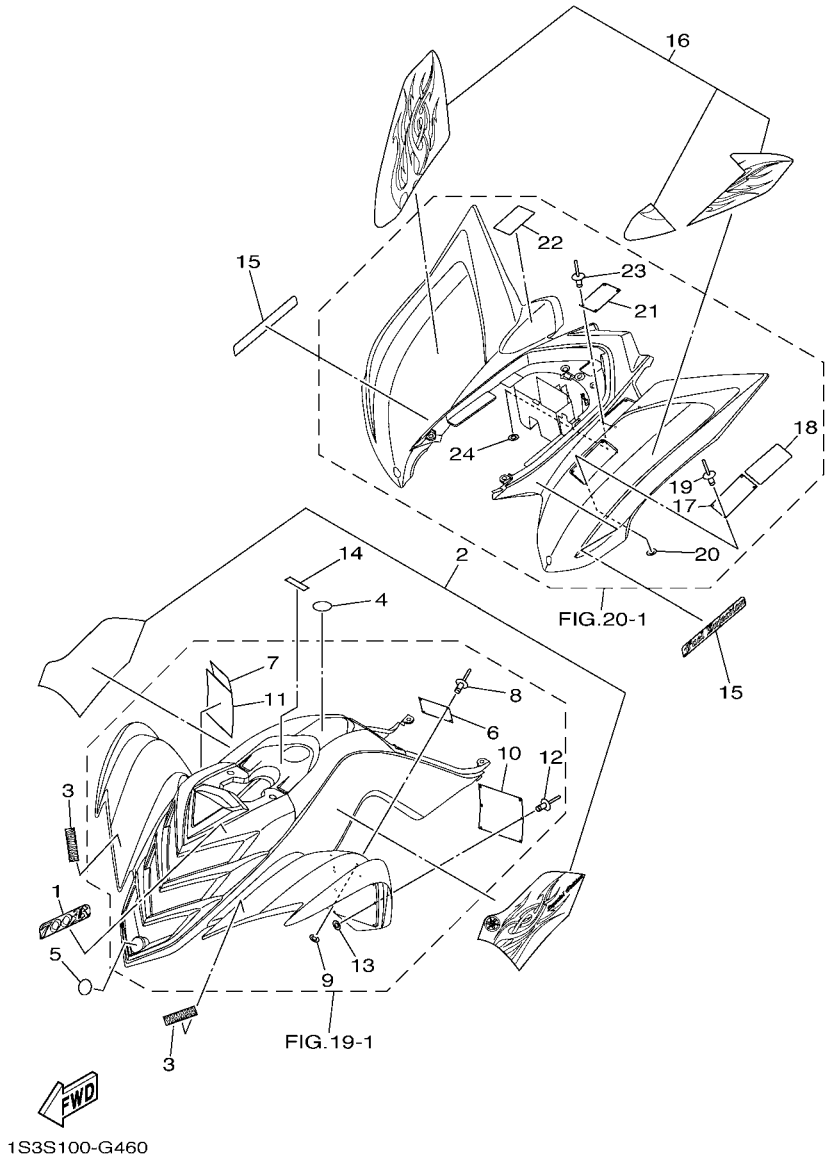

FIG. 46 EMBLEM & LABEL 2

REF. NO.	PART NO.	DESCRIPTION	USA	CAN	EUR	OCE		REMARKS
1	1S3–21565–80	EMBLEM, 2		1				
2	1S3–2159A–40	GRAPHIC SET 1		1				
3	3GD–2153E–10	EMBLEM, YAMAHA		2				
4	5D3–2164B–00	EMBLEM,3D		1				
5	5KM–2175B–00	TUNING FORK MARK		1				
6	5FE–21697–01	LABEL, CAUTION 2		1				ENGLISH
7	3JM–21697–10	LABEL, CAUTION 2		1				FRENCH
8	90267–32004	RIVET, BLIND		4				
9	90201–03008	WASHER, PLATE		4				
10	5FE–21568–01	LABEL, WARNING		1				ENGLISH
11	4WU–21568–10	LABEL, WARNING		1				FRENCH
12	90267–32004	RIVET, BLIND		6				
13	90201–03008	WASHER, PLATE		6				
14	4SH–2416E–00	LABEL, CAUTION CANADA		1				ENGLISH
15	1S3–2163G–20	EMBLEM 1		2				
16	1S3–2165A–C0	GRAPHIC SET,REAR FENDER		1				
17	5LP–21696–00	LABEL, CAUTION		1				ENGLISH
18	5LP–21696–B0	LABEL, CAUTION		1				FRENCH
19	90267–32004	RIVET, BLIND		4				
20	90201–03008	WASHER, PLATE		4				
21	5FE–2151H–01	LABEL 5		1				ENGLISH
22	4WU–2151H–10	LABEL 5		1				FRENCH
23	90267–32004	RIVET, BLIND		4				
24	90201–03008	WASHER, PLATE		4				

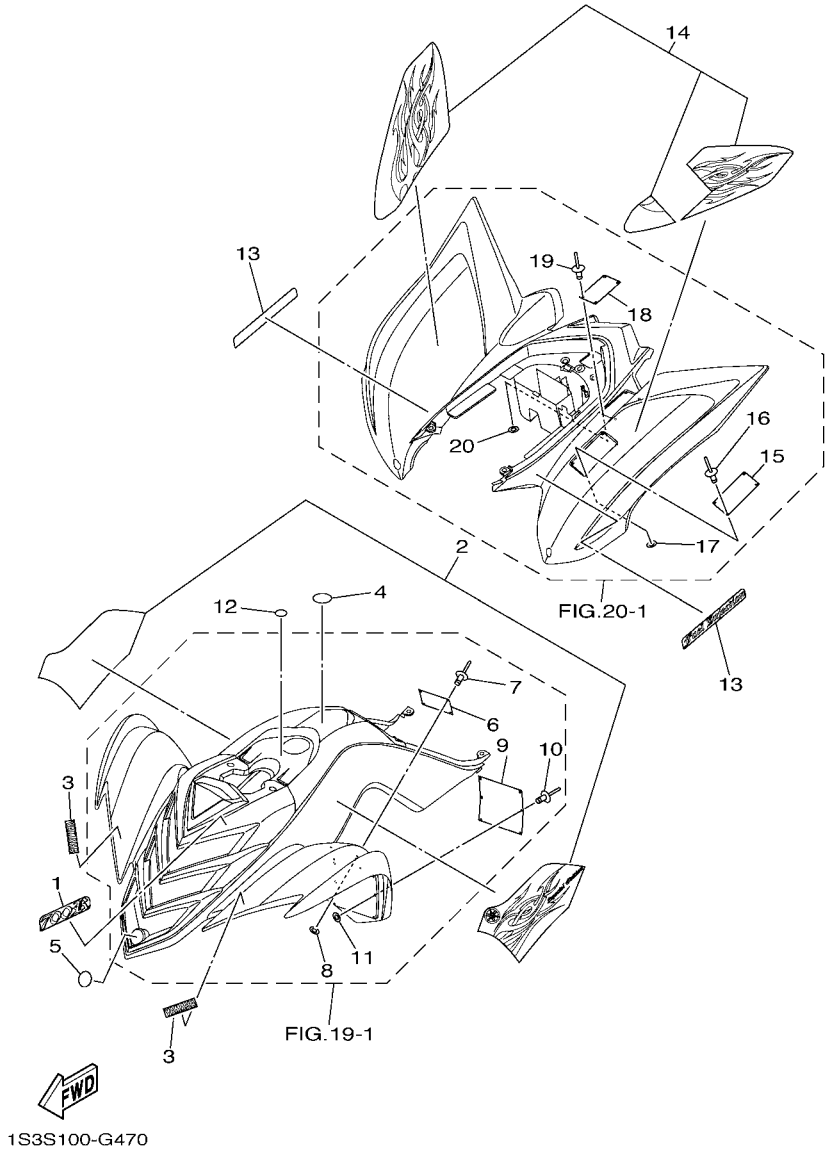

FIG. 47 EMBLEM & LABEL 3

REF. NO.	PART NO.	DESCRIPTION	USA	CAN	EUR	OCE		REMARKS
1	1S3–21565–80	EMBLEM, 2			1			
2	1S3–2159A–40	GRAPHIC SET 1			1			
3	3GD–2153E–10	EMBLEM, YAMAHA			2			
4	5D3–2164B–00	EMBLEM,3D			1			
5	5KM–2175B–00	TUNING FORK MARK			1			
6	5FK–21697–00	LABEL, CAUTION 2			1			
7	90267–32004	RIVET, BLIND			4			
8	90201–03008	WASHER, PLATE			4			
9	5FK–21568–00	LABEL, WARNING			1			
10	90267–32004	RIVET, BLIND			6			
11	90201–03008	WASHER, PLATE			6			
12	3ME–2415E–01	LABEL, CAUTION			1			
13	1S3–2163G–20	EMBLEM 1			2			
14	1S3–2165A–B0	GRAPHIC SET,REAR FENDER			1			
15	5LP–21696–M0	LABEL, CAUTION			1			
16	90267–32004	RIVET, BLIND			4			
17	90201–03008	WASHER, PLATE			4			
18	5FK–2151H–00	LABEL 5			1			
19	90267–32004	RIVET, BLIND			4			
20	90201–03008	WASHER, PLATE			4			

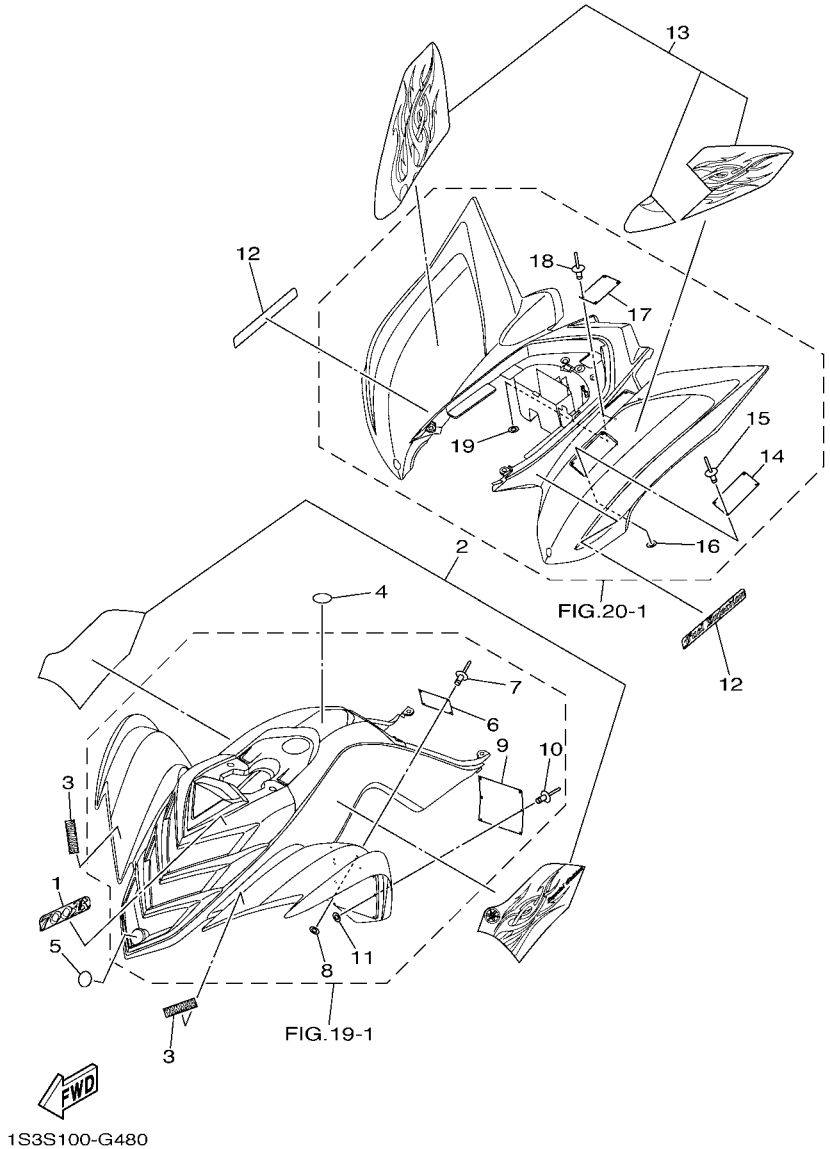

FIG. 48 EMBLEM & LABEL 4

REF. NO.	PART NO.	DESCRIPTION	USA	CAN	EUR	OCE		REMARKS
1	1S3–21565–80	EMBLEM, 2				1		
2	1S3–2159A–40	GRAPHIC SET 1				1		
3	3GD–2153E–10	EMBLEM, YAMAHA				2		
4	5D3–2164B–00	EMBLEM,3D				1		
5	5KM–2175B–00	TUNING FORK MARK				1		
6	5FE–21697–01	LABEL, CAUTION 2				1		ENGLISH
7	90267–32004	RIVET, BLIND				4		
8	90201–03008	WASHER, PLATE				4		
9	5FE–21568–11	LABEL, WARNING				1		ENGLISH
10	90267–32004	RIVET, BLIND				6		
11	90201–03008	WASHER, PLATE				6		
12	1S3–2163G–20	EMBLEM 1				2		
13	1S3–2165A–B0	GRAPHIC SET,REAR FENDER				1		
14	5LP–21696–00	LABEL, CAUTION				1		ENGLISH
15	90267–32004	RIVET, BLIND				4		
16	90201–03008	WASHER, PLATE				4		
17	5FE–2151H–01	LABEL 5				1		ENGLISH
18	90267–32004	RIVET, BLIND				4		
19	90201–03008	WASHER, PLATE				4		

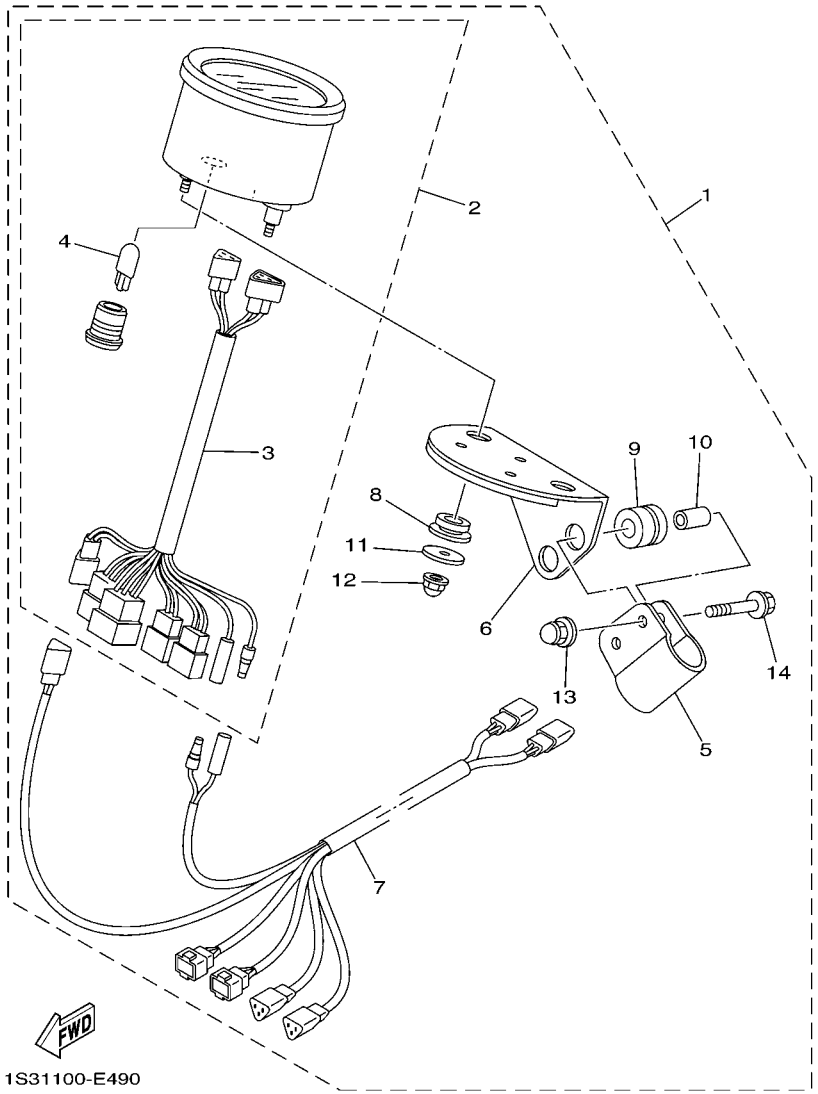

FIG. 49 ALTERNATE FOR METER

REF. NO.	PART NO.	DESCRIPTION	USA	CAN	EUR	OCE		REMARKS
1	1S3–W0081–00	SPEEDOMETER KIT		1				AP
2	1S3–83580–00	.SPEEDOMETER ASSY		1				
3	5LP–83509–00	..SOCKET CORD ASSY		1				
4	4R0–83517–00	..BULB (12V-3.4W T10)		1				
5	5LP–8354B–00	.BRACKET, METER		1				
6	5LP–8354C–00	.BRACKET, METER		1				
7	1S3–82509–00	.WIRE, SUB LEAD		1				
8	90480–13567	.GROMMET		2				
9	90480–14182	.GROMMET		2				
10	90387–06697	.COLLAR		2				
11	90201–052E8	.WASHER, PLATE		2				
12	90176–05054	.NUT, CROWN		2				
13	90176–06055	.NUT, CROWN		2				
14	95817–06030	.BOLT, FLANGE		2				

PART NO.	REF. NO.
1S3–11101–00	1 – 1
5VK–1111F–00	5 – 7
4G0–11133–11	1 – 2
1S3–11165–00	12 – 9
1S3–11166–00	12 – 7
3B4–11181–00	1 – 5
1S3–11185–00	1 – 12
1S3–11186–00	1 – 15
214–11198–01	8 – 13
1S3–11310–00	2 – 1
1S3–1131E–00	1 – 18
1S3–11351–00	2 – 2
1S3–11395–00	2 – 5
1S3–11400–00	3 – 1
1S3–11401–09	3 – 2
1S3–11422–00	3 – 3
1S3–11454–00	3 – 17
1S3–11464–00	3 – 18
1S3–11531–00	3 – 16
1S3–11536–00	3 – 15
1S3–11603–10	3 – 12
1S3–11631–10	3 – 11
5VK–11633–00	3 – 13
1S3–11651–00	3 – 6
1S3–11681–00	3 – 4
5VK–12111–00	4 – 1
1S3–12113–00	4 – 3
3YF–12116–00	4 – 4
3YF–12117–01	4 – 6
4G0–12118–00	4 – 7
5H0–12119–00	4 – 5
5VK–12121–00	4 – 2
5VK–12146–00	4 – 10
5VK–12151–00	4 – 8
5XT–12159–00	4 – 11
5VK–12161–00	4 – 9
1S3–12170–01	5 – 1
1S3–12176–00	5 – 9
3TB–12210–00	5 – 16
4DW–12213–00	5 – 18
5VK–12231–00	5 – 12
1S3–12241–00	5 – 13
1S3–12280–01	5 – 5
5VK–12284–00	5 – 3
1S3–12290–00	5 – 4
1S3–12405–00	7 – 11
1S3–1240A–00	7 – 10
5VK–12410–00	7 – 1

PART NO.	REF. NO.
1S3–12413–00	7 – 2
1S3–12420–00	6 – 2
1S3–12421–00	6 – 7
1S3–12422–00	6 – 4
1S3–12428–00	6 – 12
1S3–12436–00	6 – 1
11H–12438–10	6 – 10
1S3–1243A–00	10 – 23
1S3–1243E–00	10 – 24
1S3–12450–00	6 – 3
5VK–12459–00	6 – 15
22W–12462–00	7 – 15
1S3–12465–00	7 – 19
1S3–12467–00	19 – 19
1S3–12469–00	6 – 18
1AA–12535–00	7 – 12
1S3–12577–00	6 – 21
1S3–12578–00	7 – 8
1S3–12579–00	7 – 16
583–13113–00	8 – 26
1S3–13132–00	8 – 33
1S3–13160–00	10 – 9
1S3–13171–00	8 – 22
5LP–13300–00	8 – 1
3AJ–13325–00	8 – 5
1S3–13327–00	8 – 8
5LP–13329–00	8 – 2
1S3–13356–00	8 – 7
1S3–13410–00	8 – 10
1S3–13416–00	8 – 29
4X7–13440–01	8 – 14
1S3–13447–00	8 – 15
1S3–13464–10	21 – 24
1S3–13465–00	21 – 19
1S3–13493–00	10 – 13
1S3–13545–00	9 – 3
8FP–13556–00	10 – 3
5VK–13586–00	9 – 1
1S3–13750–10	10 – 1
5VK–13761–00	10 – 4
1S3–13907–02	26 – 18
1S3–13971–00	26 – 1
1S3–13971–10	26 – 1
4BH–14134–00	10 – 14
3JC–14146–00	10 – 19
4WV–14147–10	10 – 17
1UY–14155–00	10 – 18
1S3–14161–00	10 – 15

PART NO.	REF. NO.
8CC–14216–10	10 – 8
5JW–14348–00	10 – 6
1S3–14411–00	9 – 6
1S3–14412–01	9 – 7
31A–14419–00	9 – 20
	26 – 35
5KM–14419–00	9 – 18
31A–14435–00	9 – 19
	26 – 36
5GH–14436–00	9 – 16
1S3–14451–00	9 – 9
1S3–14453–00	9 – 8
10M–14457–00	9 – 21
1S3–14457–00	9 – 22
59V–14457–00	9 – 23
1S3–14458–00	9 – 10
1S3–14459–01	9 – 11
5VX–14503–00	10 – 12
5YP–14562–00	10 – 22
1S3–14611–00	11 – 1
1S3–14612–00	11 – 2
3YF–14613–01	11 – 23
1S3–14621–01	11 – 3
1S3–14628–00	11 – 6
1S3–14710–10	11 – 11
3YF–14714–00	11 – 5
5LP–14714–00	11 – 12
1S3–14728–00	11 – 15
1S3–14752–00	11 – 13
5JW–14945–00	10 – 20
1S3–15100–01	12 – 1
1S3–15113–00	13 – 10
1S3–15118–00	13 – 20
1S3–15189–00	13 – 24
4JT–15381–01	12 – 13
1S3–15383–00	12 – 11
1S3–15411–00	13 – 1
1S3–15421–00	13 – 11
1S3–15431–00	13 – 14
1S3–15441–00	13 – 18
1S3–15451–00	13 – 2
1S3–15462–00	13 – 15
1S3–1546C–00	13 – 23
1S3–15484–00	38 – 12
1S3–15515–00	14 – 1
1S3–15517–00	14 – 4
1VJ–15522–00	14 – 3
1S3–15560–00	14 – 5

PART NO.	REF. NO.
5VK–15590–00	14 – 7
1S3–16111–00	15 – 1
1S3–16150–00	15 – 5
2JN–16154–00	15 – 6
5TA–16321–00	15 – 13
4X7–16325–00	15 – 11
	15 – 14
5TG–16331–00	15 – 10
3LD–16340–01	15 – 22
132–16346–00	17 – 6
1S3–16351–00	15 – 15
4XV–16356–01	15 – 21
1S3–16371–00	15 – 7
5EB–16382–00	15 – 24
5JG–16383–00	15 – 9
5JG–16384–00	15 – 8
4X7–16385–00	15 – 12
1S3–17121–00	16 – 10
1S3–17131–00	16 – 5
1S3–17141–00	16 – 7
1S3–17151–00	16 – 2
1S3–17211–00	16 – 25
1S3–17221–00	16 – 15
1S3–17231–00	16 – 20
1S3–17241–00	16 – 18
1S3–17243–00	16 – 38
1S3–17251–00	16 – 23
1S3–17253–00	16 – 28
1S3–17285–00	16 – 26
1S3–17401–00	16 – 1
1S3–17402–00	16 – 13
1S3–17430–00	16 – 33
1S3–17432–00	16 – 34
1S3–17466–00	13 – 12
1S3–17471–00	16 – 42
1S3–18101–00	17 – 10
1S3–18110–10	17 – 33
5YT–18113–00	17 – 34
1S3–18122–00	17 – 16
1S3–18140–00	17 – 4
5JW–18144–00	17 – 5
1S3–18172–00	17 – 20
3XJ–18173–10	17 – 23
3XJ–18178–00	17 – 24
3XJ–18182–00	17 – 17
3XJ–18184–00	17 – 19
4EW–18185–00	17 – 3
5LP–18337–01	17 – 27

PART NO.	REF. NO.
1S3–18380–00	17 – 26
5LP–18431–00	17 – 31
1S3–18501–00	17 – 7
1S3–18502–00	17 – 8
1S3–18503–00	17 – 9
1S3–18541–00	17 – 1
5VK–18699–00	17 – 15
1S3–21101–18	18 – 1
1S3–21190–18	18 – 2
1S3–21274–00	43 – 3
1S3–21315–10	18 – 4
1S3–21316–10	18 – 8
1S3–21317–10	18 – 9
22F–2139X–00	43 – 29
1S3–2140A–00	18 – 33
	20 – 2
1S3–21471–00	18 – 15
1S3–21513–00	19 – 10
1S3–21514–00	19 – 11
5FK–2151H–00	47 – 18
5FE–2151H–01	45 – 17
	46 – 21
	48 – 17
4WU–2151H–10	46 – 22
3GD–2153E–10	45 – 3
	46 – 3
	47 – 3
	48 – 3
1S3–21541–00	19 – 2
1S3–21556–F0	19 – 14
1S3–21565–80	45 – 1
	46 – 1
	47 – 1
	48 – 1
5FK–21568–00	47 – 9
5FE–21568–01	45 – 9
	46 – 10
4WU–21568–10	46 – 11
5FE–21568–11	48 – 9
1S3–2159A–40	45 – 2
	46 – 2
	47 – 2
	48 – 2
5TG–21621–00	20 – 11
1S3–2163A–00	20 – 9
1S3–2163E–00	20 – 10
1S3–2163G–20	45 – 12
	46 – 15

PART NO.	REF. NO.
1S3–2163G–20	47 – 13
	48 – 12
1S3–21643–10	20 – 30
1S3–21644–10	20 – 32
5D3–2164B–00	45 – 4
	46 – 4
	47 – 4
	48 – 4
1S3–2164F–10	20 – 18
5TG–2164G–20	20 – 20
1S3–2164H–10	20 – 19
1S3–2164J–10	20 – 21
1S3–2165A–B0	45 – 13
	47 – 14
	48 – 13
1S3–2165A–C0	46 – 16
5TG–21691–00	20 – 12
5LP–21696–00	45 – 14
	46 – 17
	48 – 14
5LP–21696–B0	46 – 18
5LP–21696–M0	47 – 15
5FK–21697–00	47 – 6
5FE–21697–01	45 – 6
	46 – 6
	48 – 6
3JM–21697–10	46 – 7
1S3–2171A–D0	19 – 17
1S3–21750–00	21 – 8
5KM–2175B–00	45 – 5
	46 – 5
	47 – 5
	48 – 5
5LP–21761–01	21 – 9
1S3–2177C–20	9 – 29
5KM–21871–00	21 – 1
1S3–21875–00	21 – 2
1S3–22110–00	22 – 1
4X7–22129–00	22 – 21
5YT–22129–00	22 – 42
1S3–22141–00	22 – 25
3YF–22149–00	22 – 22
1S3–22151–00	22 – 28
1S3–22153–00	22 – 56
5TG–22178–00	18 – 17
1S3–2217A–00	22 – 30
1S3–2217F–00	22 – 40
1S3–22184–00	22 – 20

PART NO.	REF. NO.
1S3–2219X–00	22 – 54
1S3–22210–C0	23 – 1
1S3–22210–D0	23 – 1
1S3–22210–E0	23 – 1
4AA–22259–40	23 – 2
4AA–22259–70	23 – 2
4AA–22259–80	23 – 2
1S3–22417–00	22 – 23
1S3–22475–00	22 – 16
1S3–23147–01	22 – 6
1S3–23317–00	22 – 60
1S3–23350–A0	25 – 23
1S3–23350–B0	25 – 23
1S3–23350–C0	25 – 23
1S3–23501–00	25 – 27
1S3–23502–00	25 – 28
5YT–23517–00	25 – 13
	25 – 14
5TG–23540–30	25 – 7
5TG–23550–30	25 – 8
5TG–23570–30	25 – 1
5LP–23579–00	25 – 2
	25 – 5
5TG–23580–30	25 – 4
1UY–23812–00	24 – 13
1S3–23813–10	24 – 1
8K1–23814–00	24 – 11
5TG–23816–10	24 – 2
1S3–23831–20	24 – 3
1S3–23841–20	24 – 4
1S3–23845–20	24 – 5
1UY–23868–01	24 – 15
5GT–23872–00	18 – 25
1UY–23894–01	24 – 17
1S3–24110–00	26 – 3
1S3–24110–20	26 – 3
4EW–2412F–00	26 – 5
1S3–2413X–00	26 – 31
1S3–2414H–00	26 – 16
1S3–2414J–00	26 – 29
3ME–2415E–01	47 – 12
4SH–2416E–00	46 – 14
1S3–2416F–00	26 – 17
1S3–24181–00	26 – 24
1S3–24182–00	26 – 30
1S3–24183–00	26 – 33
1S3–24278–00	26 – 22
1S3–24279–00	26 – 23

PART NO.	REF. NO.
1S3–24452–00	26 – 25
1S3–24486–00	26 – 20
1S3–24491–10	26 – 19
2FJ–24610–00	26 – 4
1S3–24710–50	27 – 1
1S3–24723–00	27 – 6
509–24724–00	27 – 5
1S3–24731–50	27 – 2
22W–24741–00	27 – 4
1S3–25111–00	28 – 7
5LP–25117–00	28 – 9
1S3–25127–00	28 – 16
5TG–2514A–00	29 – 38
5LP–25180–20	28 – 1
	28 – 4
1S3–25311–00	22 – 2
1S3–25317–00	22 – 5
1S3–25381–10	30 – 18
1S3–25383–20	30 – 7
1S3–25386–00	30 – 14
5LP–25390–20	30 – 1
	30 – 4
1S3–25415–00	31 – 7
5TG–25438–10	30 – 15
5D3–25689–00	42 – 13
1S3–25712–00	31 – 1
1S3–25721–00	22 – 10
1S3–25726–00	42 – 14
1S3–25727–00	42 – 12
1S3–2580E–00	35 – 1
1S3–2580T–01	29 – 3
1S3–2580U–01	29 – 17
1S3–2580V–11	31 – 8
5UG–25827–00	31 – 15
1S3–25828–00	29 – 16
	29 – 30
5GH–25828–00	31 – 16
1AE–2582A–00	35 – 3
3GD–2582T–10	29 – 1
1S3–2582W–10	31 – 2
5MV–25833–00	33 – 7
5UG–25833–00	31 – 28
5D3–2583T–00	33 – 1
5D3–25852–00	33 – 4
3XP–25852–50	35 – 15
2VN–25854–00	35 – 16
4TT–25854–00	33 – 3
2VN–25855–00	35 – 17

PART NO.	REF. NO.
2GU–25866–00	33 – 17
5LP–25867–00	33 – 6
1S3–25871–10	33 – 15
1S3–25872–10	33 – 13
5TG–25873–10	33 – 14
1S3–25874–10	35 – 26
5TG–25875–00	25 – 32
5TG–25876–00	25 – 33
1S3–25886–00	22 – 59
5JJ–25894–00	35 – 14
1S3–25895–00	35 – 21
5UG–25898–00	31 – 23
5MV–2589F–00	33 – 11
4NK–2589H–00	33 – 5
3JD–25917–00	29 – 7
	29 – 21
	31 – 21
3JD–25919–00	29 – 8
	29 – 22
4GY–25919–50	31 – 11
5GH–25924–00	31 – 14
5TG–25924–00	29 – 15
	29 – 29
3JD–25926–00	29 – 12
	29 – 26
	31 – 20
1UY–25926–51	29 – 10
	29 – 24
	31 – 17
1UY–25937–51	29 – 6
	29 – 20
	31 – 19
1UY–25938–51	29 – 11
	29 – 25
	31 – 18
3JD–25961–00	29 – 13
	29 – 27
	31 – 22
1S3–25972–00	31 – 27
1S3–25973–00	31 – 26
1UY–25974–51	31 – 25
5TG–25977–50	31 – 29
1S3–25978–00	31 – 24
1S3–26111–20	32 – 1
1S3–26113–00	32 – 24
1S3–26124–00	32 – 3
1NV–26129–00	32 – 14
1S3–26150–10	32 – 22

PART NO.	REF. NO.
5LP–26241–00	32 – 2
4KB–26250–20	32 – 4
4KB–26256–00	32 – 8
4KB–26258–00	32 – 10
1UY–26259–00	33 – 12
1NV–2625G–01	32 – 6
4KB–2628F–20	32 – 5
4KB–2628G–00	32 – 13
1S3–26292–00	35 – 18
1NV–26304–00	32 – 12
1S3–26311–10	32 – 20
4KB–2632G–00	32 – 7
1S3–26335–00	32 – 21
1S3–26341–00	32 – 30
31A–26372–00	32 – 29
1S3–2637E–10	32 – 23
1NV–26398–00	32 – 15
371–27114–00	27 – 3
1S3–27211–10	34 – 1
4SS–27218–00	35 – 8
2YK–27222–00	35 – 9
1S3–27411–10	34 – 5
1S3–27421–10	34 – 8
1S3–27453–00	35 – 24
5TG–28100–10	18 – 34
1NV–2811A–01	18 – 35
5LP–2819R–00	45 – 20
1S3–2845N–00	36 – 1
1S3–2845R–30	36 – 3
1S3–2845R–40	36 – 3
1S3–2845R–50	36 – 3
1S3–81410–00	37 – 1
1S3–81450–00	37 – 2
3AJ–81801–00	38 – 2
3KS–81809–00	38 – 5
1S3–81815–00	38 – 8
3AJ–81826–00	38 – 7
4XV–8182A–00	38 – 10
11H–81844–00	38 – 6
1FK–81847–00	38 – 3
4NK–81850–00	38 – 4
4G0–81871–00	38 – 9
1S3–81890–00	38 – 1
1S3–81940–00	43 – 35
5DM–81950–00	43 – 50
5EA–81950–20	43 – 49
5VK–81950–30	43 – 48
5BN–81960–00	43 – 16

PART NO.	REF. NO.
5GJ–82100–01	43 – 18
1S3–82115–00	43 – 32
1S3–82116–10	43 – 33
5TG–82121–10	43 – 30
1S3–82122–00	43 – 28
1S3–82123–00	43 – 26
1S3–82128–00	43 – 24
1S3–82129–00	43 – 27
1S3–8212B–00	43 – 19
116–82131–00	18 – 36
2GH–82151–00	43 – 36
5JJ–82151–10	43 – 45
5JJ–82151–30	43 – 46
5GT–82180–00	43 – 43
3TB–82310–00	43 – 5
5VK–82370–00	43 – 7
1C7–82380–00	10 – 5
1S3–82509–00	49 – 7
5LP–82510–00	43 – 38
1S3–82530–10	43 – 47
3GB–82540–01	43 – 9
5LP–82540–01	43 – 8
1S3–82541–00	43 – 34
5GT–82560–00	43 – 44
3HN–82569–00	43 – 39
5PS–82576–01	43 – 51
3HN–82579–00	43 – 40
1S3–82590–10	43 – 42
5YT–82910–10	42 – 2
5YT–82911–10	42 – 3
4V4–82913–00	32 – 17
5TG–82913–00	42 – 7
5KM–82917–00	42 – 9
5LP–83509–00	49 – 3
4R0–83517–00	49 – 4
1S3–83530–00	43 – 41
5LP–8354B–00	49 – 5
5LP–8354C–00	49 – 6
1S3–83580–00	49 – 2
1S3–83755–00	43 – 13
2HT–83912–00	42 – 4
5D3–83922–00	33 – 8
5TG–83923–00	42 – 15
437–83936–01	32 – 16
1S3–83973–00	42 – 1
5D3–83980–00	33 – 10
5TG–84110–12	39 – 2
1S3–8413J–00	39 – 5

PART NO.	REF. NO.
1S3–8413J–00	39 – 11
5TG–84140–01	39 – 4
1S3–84165–00	39 – 3
1S3–84166–00	39 – 9
5TG–84310–12	39 – 8
4KB–84314–01	39 – 1
	39 – 7
5TG–84340–01	39 – 10
1S3–84703–10	41 – 10
1S3–84710–00	40 – 1
	41 – 1
1S3–84716–40	40 – 4
	41 – 4
1S3–84736–00	40 – 9
	41 – 9
1S3–84751–10	41 – 12
2EK–85111–00	44 – 9
1S3–85112–10	44 – 7
1S3–85122–10	44 – 8
3Y6–85130–02	44 – 1
449–85131–02	44 – 4
1S3–85370–00	43 – 58
1S3–85546–00	43 – 4
5PS–85790–00	43 – 11
8GL–85885–00	10 – 2
5VU–85886–00	9 – 17
1S3–8591A–00	43 – 1
5D3–W0041–00	33 – 2
1S3–W0042–50	35 – 2
1S3–W0045–00	29 – 14
1S3–W0045–10	29 – 28
1S3–W0046–01	31 – 13
3GD–W0047–00	31 – 10
3LC–W0047–50	29 – 5
	29 – 19
1UY–W0048–50	29 – 9
	29 – 23
	31 – 12
5TG–W0057–00	29 – 4
	29 – 18
5UG–W0057–00	31 – 9
1S3–W0081–00	49 – 1
1S3–W2151–40	19 – 1
1S3–W215B–40	19 – 1
1S3–W215C–40	19 – 1
1S3–W215E–40	19 – 1
1S3–W2161–40	20 – 1
1S3–W216B–40	20 – 1

PART NO.	REF. NO.
1S3–W216C–40	20 – 1
90101–06664	17 – 25
90105–06078	5 – 8
90105–06081	12 – 10
90105–06082	8 – 11
	12 – 12
90105–06084	9 – 27
	19 – 21
	20 – 3
	43 – 20
90105–06142	17 – 35
90105–07004	5 – 6
	5 – 10
90105–08104	31 – 30
90105–08142	11 – 20
	18 – 10
	36 – 4
90105–08184	29 – 31
90105–10131	25 – 24
90105–10132	25 – 16
90105–10135	25 – 15
90105–10294	34 – 6
	34 – 9
90105–12038	23 – 3
90109–06169	8 – 18
90109–06172	19 – 3
	22 – 29
90109–06198	18 – 16
90109–06199	22 – 55
90109–06798	42 – 5
90109–067F4	25 – 34
90109–08076	31 – 3
90109–08082	29 – 2
90109–08100	36 – 2
90109–09002	1 – 7
90109–09003	1 – 6
90109–09005	1 – 8
90109–10013	30 – 16
90109–10018	22 – 34
90109–10019	23 – 8
90109–10020	22 – 45
90109–12009	22 – 49
90110–05030	8 – 9
90110–05031	13 – 9
	37 – 4
90110–06182	13 – 21
90110–06202	19 – 5
90110–12001	22 – 12

PART NO.	REF. NO.
90111–06038	20 – 7
90113–06055	31 – 6
90114–10006	28 – 8
90114–10013	30 – 8
90119–06137	35 – 19
90119–06152	21 – 5
90119–10023	2 – 3
90122–06010	9 – 13
90123–08046	42 – 10
90149–05018	8 – 20
90149–05299	19 – 15
90149–06074	12 – 14
90149–08018	14 – 8
90149–10034	18 – 3
90154–05013	20 – 13
90154–06014	29 – 39
90159–06029	15 – 18
90170–06128	4 – 12
90170–12054	24 – 7
90170–12055	24 – 6
90170–16326	3 – 23
90170–20274	15 – 4
90171–10001	24 – 8
	24 – 22
	25 – 30
90171–14002	29 – 36
90171–16002	30 – 12
90176–05054	49 – 12
90176–06055	49 – 13
90179–08148	42 – 11
90179–16004	3 – 9
90179–20007	15 – 20
90179–22011	16 – 47
90179–36003	31 – 4
90183–05008	19 – 16
90185–10011	18 – 12
	18 – 14
	30 – 17
90185–10012	22 – 39
	22 – 47
	23 – 10
	25 – 19
	25 – 20
	25 – 25
90185–12007	22 – 53
	23 – 6
90185–14009	24 – 20
90185–16002	22 – 27

PART NO.	REF. NO.
90201–03008	45 – 8
	45 – 11
	45 – 16
	45 – 19
	46 – 9
	46 – 13
	46 – 20
	46 – 24
	47 – 8
	47 – 11
	47 – 17
	47 – 20
	48 – 8
	48 – 11
	48 – 16
	48 – 19
90201–04027	22 – 58
90201–04028	9 – 15
90201–04030	43 – 54
90201–05015	11 – 8
	11 – 17
90201–05019	11 – 10
90201–05025	40 – 3
	41 – 3
90201–052E8	49 – 11
90201–06033	26 – 12
90201–06035	11 – 9
90201–06076	20 – 17
90201–06078	19 – 9
	39 – 16
90201–06089	19 – 13
90201–06090	26 – 9
90201–06093	20 – 24
90201–063F3	22 – 36
90201–08043	18 – 19
90201–08048	11 – 21
90201–08053	20 – 26
90201–08060	31 – 31
90201–08083	35 – 12
90201–082A6	21 – 12
90201–10034	22 – 38
90201–10035	22 – 46
	25 – 26
90201–10036	23 – 9
90201–10037	25 – 17
	25 – 18
90201–10118	33 – 19
	35 – 28

PART NO.	REF. NO.
90201–10614	15 – 30
90201–12030	22 – 37
90201–12032	22 – 52
	23 – 5
90201–12040	17 – 14
90201–12541	6 – 11
90201–12575	17 – 29
90201–14021	24 – 19
90201–14586	29 – 35
90201–152P4	16 – 36
90201–16013	3 – 8
90201–16018	22 – 26
90201–16023	30 – 11
90201–177G4	17 – 13
90201–20022	29 – 33
90201–20276	16 – 29
90201–266F6	34 – 3
90201–286K9	14 – 2
90208–20001	15 – 19
90208–37001	31 – 5
90209–06096	9 – 12
90209–10229	24 – 9
	24 – 23
	25 – 29
90209–22008	16 – 3
90209–26008	16 – 16
90214–22002	16 – 9
90214–22003	16 – 8
90214–26002	16 – 21
90214–26003	16 – 22
90215–16221	3 – 24
90215–20006	15 – 3
90215–25003	16 – 46
90240–08124	35 – 11
90252–03001	30 – 13
90267–32004	45 – 7
	45 – 10
	45 – 15
	45 – 18
	46 – 8
	46 – 12
	46 – 19
	46 – 23
	47 – 7
	47 – 10
	47 – 16
	47 – 19
	48 – 7

PART NO.	REF. NO.
90267–32004	48 – 10
	48 – 15
	48 – 18
90267–47187	22 – 57
90267–48138	9 – 14
90269–05055	26 – 32
90269–06002	19 – 18
	19 – 20
	43 – 31
90269–07011	26 – 28
90280–05001	3 – 7
90282–05005	3 – 22
90282–07003	15 – 2
90338–05008	26 – 26
90338–07007	42 – 17
90338–20183	18 – 28
90338–23004	18 – 29
	22 – 24
90338–24260	18 – 27
90338–26004	18 – 26
90340–14003	13 – 5
90340–14029	8 – 12
90340–36001	13 – 7
90380–10002	14 – 6
90380–22111	22 – 18
90381–15088	25 – 9
	25 – 10
90383–20032	22 – 41
90383–20033	22 – 31
90387–06098	26 – 13
90387–06136	19 – 7
90387–06146	19 – 22
90387–06153	20 – 4
	20 – 6
	40 – 7
	41 – 7
	43 – 22
90387–06166	7 – 20
90387–06168	43 – 23
90387–06204	20 – 23
90387–06205	21 – 14
90387–06697	49 – 10
90387–06M17	26 – 8
90387–07598	39 – 14
90387–08064	18 – 20
90387–08073	9 – 28
90387–090R0	24 – 18
90387–100Y6	25 – 12

PART NO.	REF. NO.
90387–101R3	25 – 11
90387–12010	22 – 48
90387–12020	23 – 7
90387–12021	22 – 33
90387–12028	22 – 51
	23 – 4
90387–125K2	22 – 43
90387–127W0	23 – 11
90387–1504G	16 – 37
90387–150R1	29 – 34
90387–16014	22 – 11
90387–17009	12 – 3
90387–20005	29 – 32
90387–20021	16 – 27
90387–22006	16 – 6
90387–26004	16 – 24
90387–26005	16 – 19
90387–28008	16 – 14
90387–28009	16 – 41
90401–08004	1 – 19
90401–10015	33 – 18
	35 – 27
90401–10024	8 – 23
90430–05126	8 – 21
90430–06014	6 – 13
	7 – 3
90430–08119	1 – 20
90430–10148	43 – 10
90430–10188	8 – 24
90430–12202	43 – 12
90430–14043	8 – 34
90445–083J4	26 – 15
90445–09777	21 – 4
90445–09M30	21 – 3
90445–11034	21 – 18
90445–16007	26 – 34
90450–22017	21 – 23
90450–32015	6 – 22
	7 – 9
	7 – 17
90450–59006	9 – 26
90450–72003	9 – 2
90460–75020	9 – 25
90461–10004	43 – 15
90461–10011	13 – 22
	16 – 43
90462–08046	13 – 26
90464–12036	18 – 30

PART NO.	REF. NO.
90464–12045	18 – 32
90464–13073	32 – 27
90464–13077	43 – 55
90464–14004	26 – 2
90464–15157	40 – 8
	41 – 8
90464–15195	43 – 56
90464–16013	43 – 61
90464–20213	18 – 31
90464–23041	21 – 7
	32 – 28
90464–66001	26 – 27
90465–10098	43 – 62
90465–13M11	43 – 57
90467–08003	21 – 6
90467–09006	10 – 21
90467–10008	21 – 17
90467–11044	35 – 22
90467–11090	10 – 25
	10 – 26
90467–13062	6 – 17
90467–14057	35 – 23
90467–140A4	12 – 8
90467–15012	9 – 5
90467–160A4	9 – 4
90467–220A1	9 – 24
90468–16191	24 – 21
90480–01017	26 – 7
90480–13459	21 – 13
90480–13567	49 – 8
90480–14101	40 – 6
	41 – 6
90480–14102	19 – 6
	39 – 13
90480–14182	49 – 9
90480–15009	35 – 20
90480–18005	26 – 11
90480–18330	7 – 18
90480–24004	21 – 16
90501–043E0	8 – 28
90501–052G5	17 – 18
90501–230E4	15 – 17
90506–20380	34 – 4
90508–18018	15 – 23
90508–35007	17 – 11
90560–06201	20 – 15
91312–04006	10 – 16
91312–04025	43 – 52

PART NO.	REF. NO.
91312–06010	11 – 14
91312–06012	8 – 25
91312–06016	21 – 26
	43 – 14
91312–06020	6 – 19
91312–06025	5 – 17
	13 – 13
91312–06030	1 – 9
91312–06035	8 – 4
91312–06040	2 – 4
91312–06095	8 – 19
91314–08035	11 – 4
	11 – 19
91314–08040	22 – 14
91401–16012	35 – 13
91402–20020	24 – 10
	24 – 24
	25 – 31
91402–30025	29 – 37
92012–06010	41 – 13
	43 – 2
92012–06012	42 – 16
92012–06025	20 – 14
92012–06030	37 – 3
92012–08016	20 – 33
	35 – 25
92012–08020	20 – 31
92012–08035	20 – 34
	35 – 10
92014–06016	42 – 18
92902–05100	32 – 19
	44 – 2
	44 – 6
	44 – 11
92902–05200	44 – 5
	44 – 10
92902–05600	32 – 26
92902–06200	11 – 18
92902–06600	5 – 15
92902–08600	15 – 25
92902–10200	28 – 15
	30 – 10
92903–08600	22 – 15
92906–04100	35 – 6
92906–04600	35 – 7
92907–06600	7 – 14
93101–12173	6 – 9
93101–14164	13 – 19

PART NO.	REF. NO.
93101–25106	3 – 21
93102–12106	17 – 32
93102–12224	17 – 22
93102–15212	15 – 28
93102–22216	28 – 13
93102–25081	18 – 23
93102–25099	18 – 24
93102–35393	16 – 40
93104–09025	32 – 11
93105–26026	28 – 12
93106–22019	22 – 19
93106–46003	22 – 4
93109–20076	22 – 32
93112–31011	24 – 14
93210–07135	8 – 17
	12 – 16
93210–10197	8 – 30
	21 – 21
93210–13361	8 – 3
93210–14369	13 – 6
93210–15620	35 – 4
93210–16629	21 – 25
93210–207A0	13 – 25
93210–21190	21 – 10
93210–25001	16 – 39
93210–33786	6 – 20
93210–357A3	13 – 8
93210–36769	30 – 19
93210–41042	7 – 7
93210–61750	6 – 5
93210–64297	8 – 16
93210–66001	22 – 8
93210–71001	22 – 9
93210–78544	1 – 16
93210–96601	1 – 13
93300–60804	18 – 18
93306–00106	6 – 6
93306–00304	15 – 16
93306–00415	16 – 31
93306–00431	16 – 12
93306–00446	28 – 10
93306–00502	3 – 20
93306–07209	5 – 2
93306–20231	28 – 11
93306–20352	18 – 22
93306–20481	3 – 19
93306–20501	16 – 11
93306–27803	16 – 32

PART NO.	REF. NO.
93306–30810	3 – 10
93306–90509	17 – 2
93306–90804	22 – 3
93306–90805	22 – 7
93310–84017	3 – 5
93315–31502	15 – 29
93317–11020	15 – 27
93317–22237	22 – 17
93410–67085	22 – 13
93430–23054	34 – 2
93440–10085	1 – 3
93440–15012	16 – 35
93440–25084	16 – 4
93440–28062	16 – 17
93450–24154	3 – 14
93503–08007	8 – 27
93603–16219	6 – 14
93608–30002	17 – 21
93612–16254	1 – 11
93700–06004	22 – 35
	22 – 44
	22 – 50
	25 – 21
	25 – 22
9383G–14231	16 – 45
93900–00022	30 – 3
	30 – 6
93900–00030	28 – 3
	28 – 6
94107–10015	28 – 2
	28 – 5
94110–09012	30 – 2
	30 – 5
94582–13098	30 – 20
94591–57126	5 – 11
94701–00330	1 – 10
95022–06008	43 – 37
95022–06010	7 – 4
95022–06012	11 – 7
	22 – 61
95022–06020	1 – 14
	1 – 17
	7 – 5
95022–06025	6 – 8
	8 – 32
	21 – 22
95022–06030	12 – 4
	13 – 4

PART NO.	REF. NO.
95022–06030	13 – 17
95022–06045	7 – 6
95022–06050	6 – 23
95022–06070	12 – 5
95022–06090	12 – 6
95022–06110	6 – 24
95302–05600	44 – 3
95302–06800	26 – 21
95602–06100	42 – 6
95602–06200	19 – 4
	20 – 8
	20 – 16
	20 – 25
95602–08200	20 – 28
95602–10200	18 – 7
95604–06100	33 – 9
95607–05100	32 – 9
95612–08625	1 – 4
95702–04500	43 – 53
95702–06500	43 – 60
95702–08500	11 – 22
95702–10500	28 – 14
	30 – 9
95802–06010	40 – 5
	41 – 5
	41 – 11
95802–06016	43 – 59
95802–06020	43 – 25
95802–06025	43 – 17
95802–06030	7 – 21
	43 – 21
95802–06035	26 – 10
	26 – 14
95802–08016	21 – 11
95812–06012	17 – 28
95812–06014	19 – 12
	20 – 5
95812–06030	19 – 8
	38 – 11
	39 – 15
95812–08014	18 – 5
95812–08045	18 – 21
95812–10030	34 – 7
95812–10055	18 – 6
95812–10090	18 – 13
95812–10110	18 – 11
95817–06030	49 – 14
95822–06012	2 – 6

PART NO.	REF. NO.
95822–06020	21 – 15
95822–06025	33 – 16
95822–08016	20 – 29
95822–08020	20 – 27
95822–08030	24 – 12
97002–05016	42 – 8
97002–05020	43 – 6
97017–06010	7 – 13
97022–06014	16 – 44
97022–06016	5 – 14
97022–06025	20 – 22
97022–08060	24 – 16
97702–50016	40 – 2
	41 – 2
97707–30510	39 – 6
	39 – 12
98502–05018	32 – 25
98502–05020	32 – 18
98506–04012	35 – 5
98507–05012	10 – 11
98507–06010	10 – 7
98507–06012	10 – 10
98702–06025	26 – 6
98902–06010	11 – 16
99001–07600	15 – 26
99001–10600	17 – 30
99009–10400	15 – 31
99009–11400	8 – 6
99009–12400	6 – 16
99009–17400	17 – 12
99009–20400	16 – 30
99009–30400	25 – 3
	25 – 6
99530–08016	12 – 15
99530–10114	8 – 31
	12 – 2
	13 – 3
	21 – 20
99530–10120	13 – 16
99530–14016	12 – 17